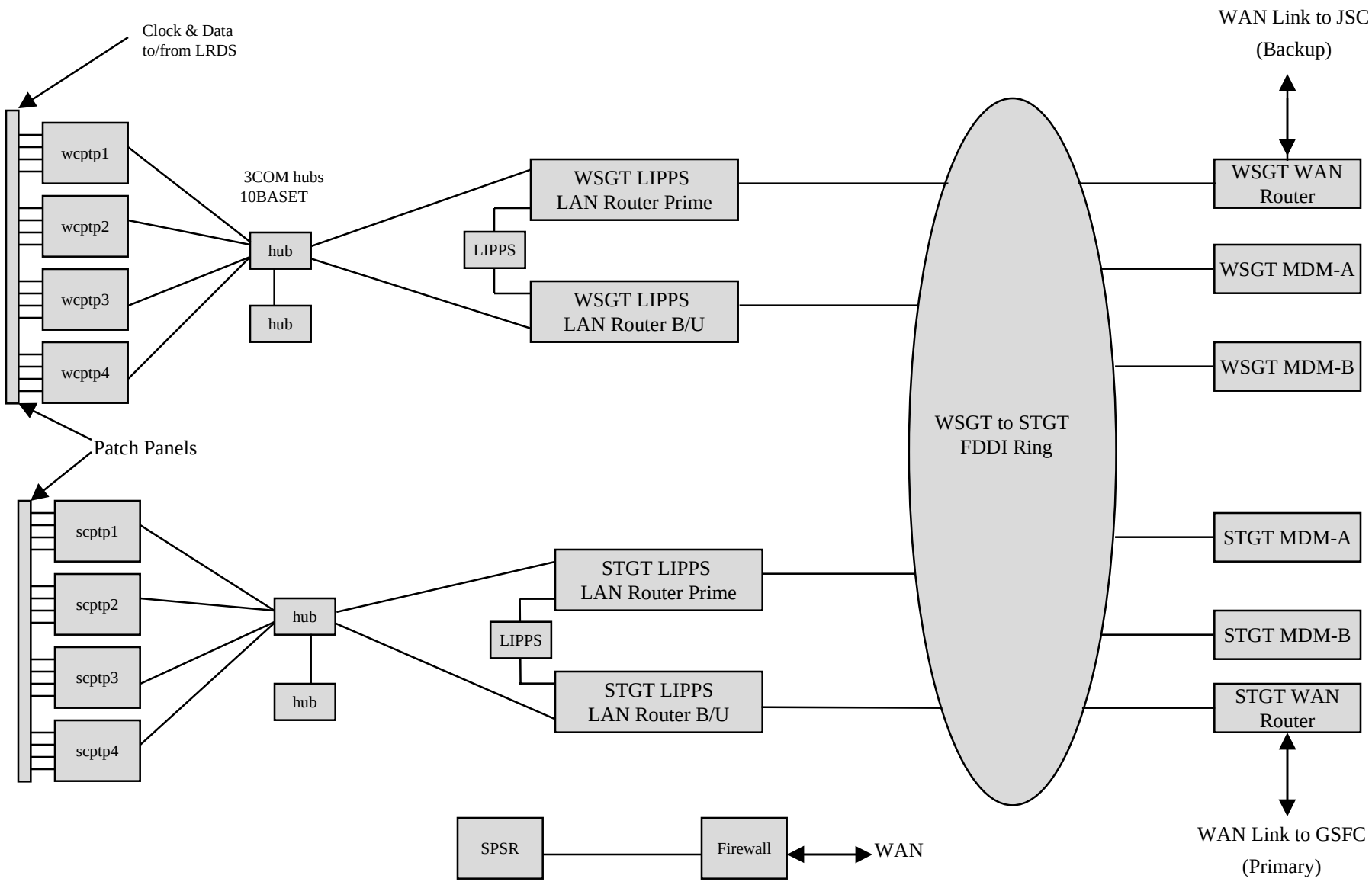

WDISC Network Links

EC-8312
Figure 5-1a

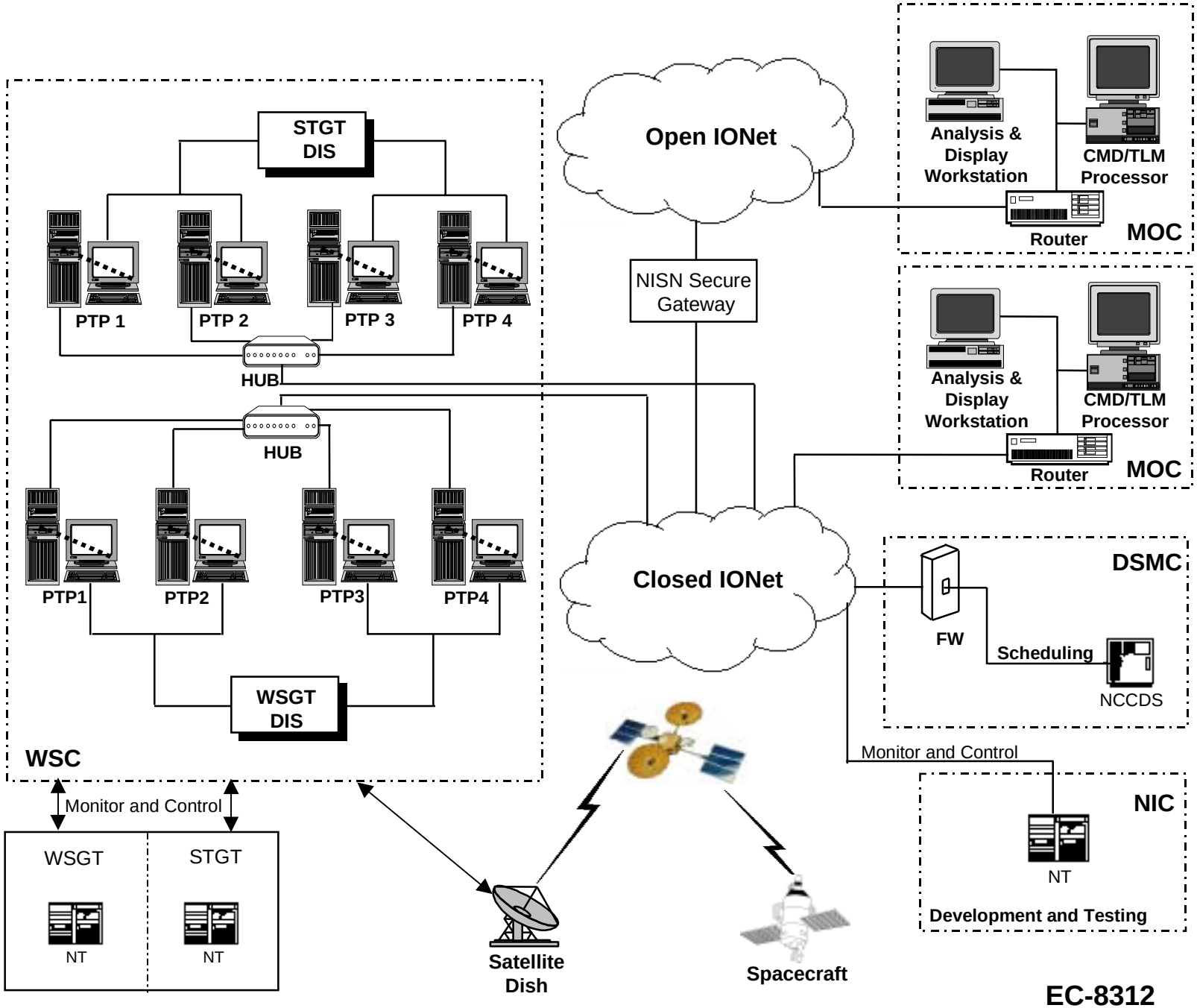

WDISC Network Connections

EC-8312
Figure 5-1b

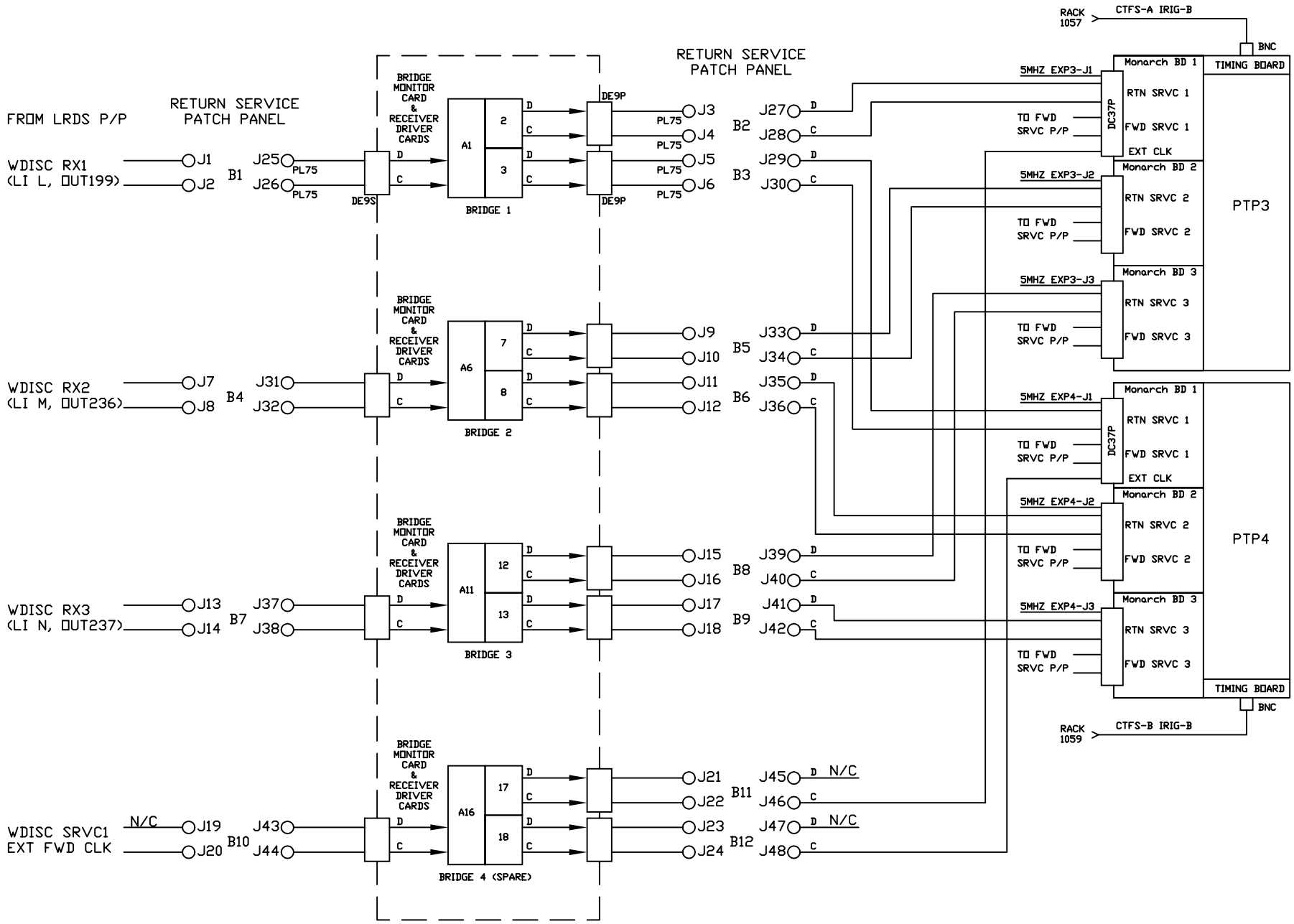

WDISC EXPANSION - RECEIVE

EC-8312

Figure 5-2

FILE: EC8312 - RTNSVC.DWG

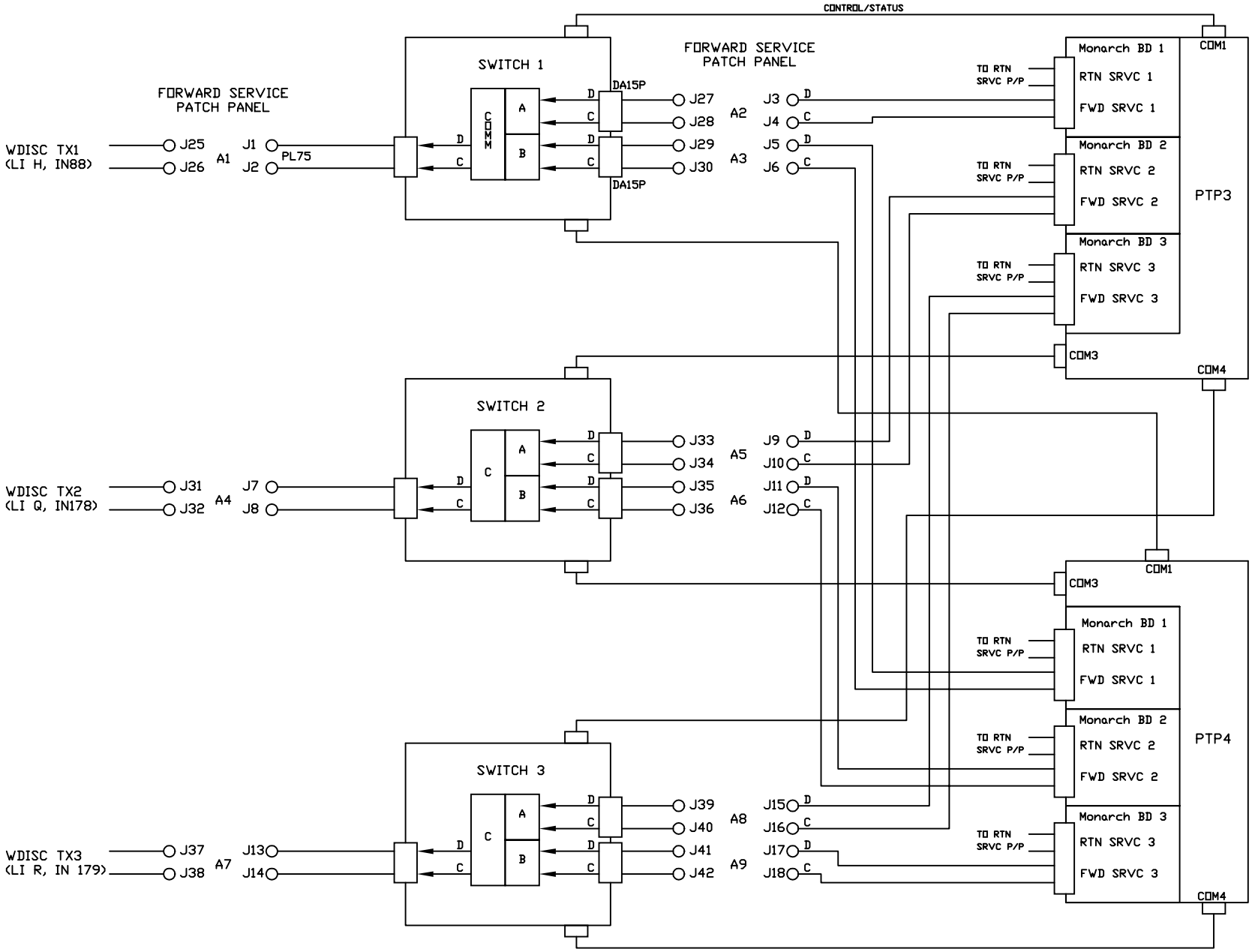

FILE: EC8312 - FWDSVC.DWG

WDISC EXPANSION - TRANSMIT

EC-8312

Figure 5-3

7109

A1	WDISC Hub 1 (3Com)
A2	WDISC Hub 2 (3Com)
A3	Empty
A4	Blank
A5	
A6	
A7	
A8	Blank
A9	ISS SKD #1
A10	
A11	
A12	
A13	ISS SKD #2
A14	
A15	
A16	
A17	Blank
A18	KVM Switch
A19	FWD Switch 1
A20	FWD Switch 2
A21	FWD Switch 3
A22	FWD P/P
A23	
A24	RTN P/P
A25	
A26	RTN RCVR/DRVR
A27	
A28	Blank
A29	KBD/LCD MON
A30	Blank
A31	WDISC PTP-3
A32	
A33	
A34	
A35	Blank
A36	WDISC PTP-4
A37	
A38	
A39	
A40	Blank
A41	5 MHz Expander PTP-3
A42	5 MHz Expander PTP-4
A43	Pw Supply (5 MHz)
A44	Blank
A45	

EC-8312
Figure 5-4

WDISC FORWARD SERVICE PATCH PANEL

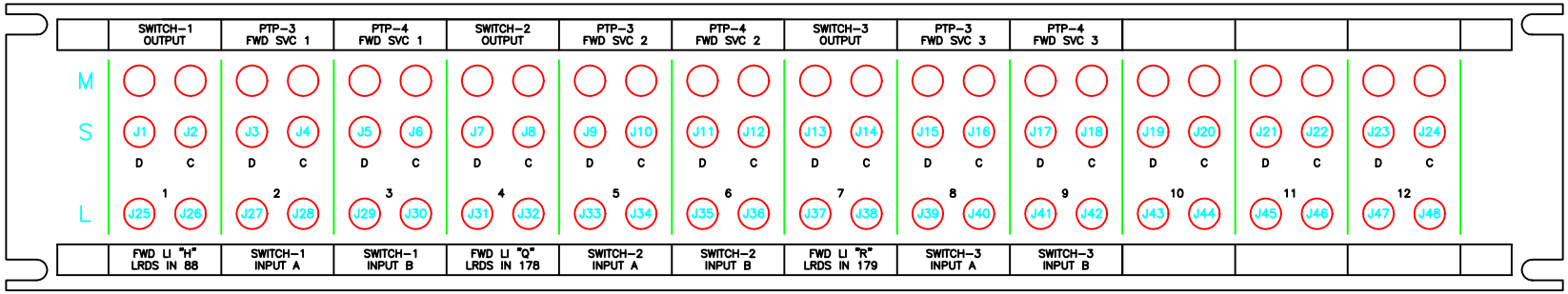

WDISC RETURN SERVICE PATCH PANEL

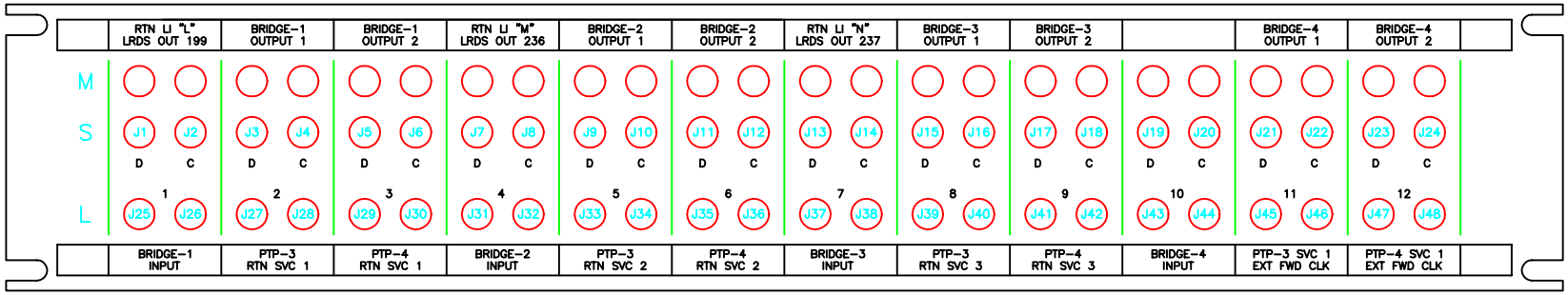

EC-8312
FIGURE 5-5

FILE: EC8312 Figure 5-5 - Patch Panels.DWG

FWD Switch Serial Control (1, 2)

25 Pin D Subminiature Connectors,
pin 2 = TD, pin 3 = RD,
pin 4 = RTS, pin 5 = CTS,
pin 6 = DSR, pin 20 = DTR,
pin 7 = Signal Ground.

FWD Switch I/O Connectors (A, B, COM)

15 Pin D Subminiature Connectors,
pin 1 = Data Tip, pin 9 = Data Ring,
pin 3 = Clock Tip, pin 11 = Clock Ring,
pins 2 and 4 = (Shield) grounds.

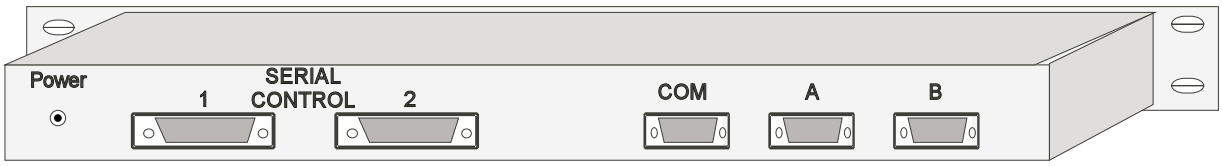

Rack Mount 2PK-AB-T1-R1

EC-8312
Figure 5-6

BRIDGE R/D CHASSIS
CONNECTOR PLACEMENT AND LABELLING

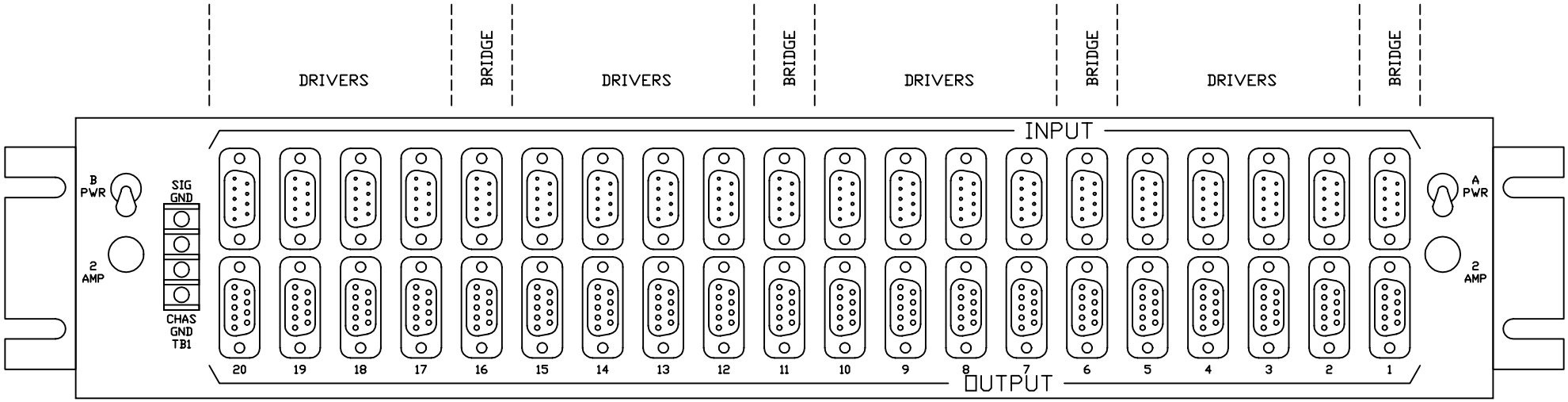

EC-8312
Figure 5-7

FILE: EC8312 - BRGCONN.DWG

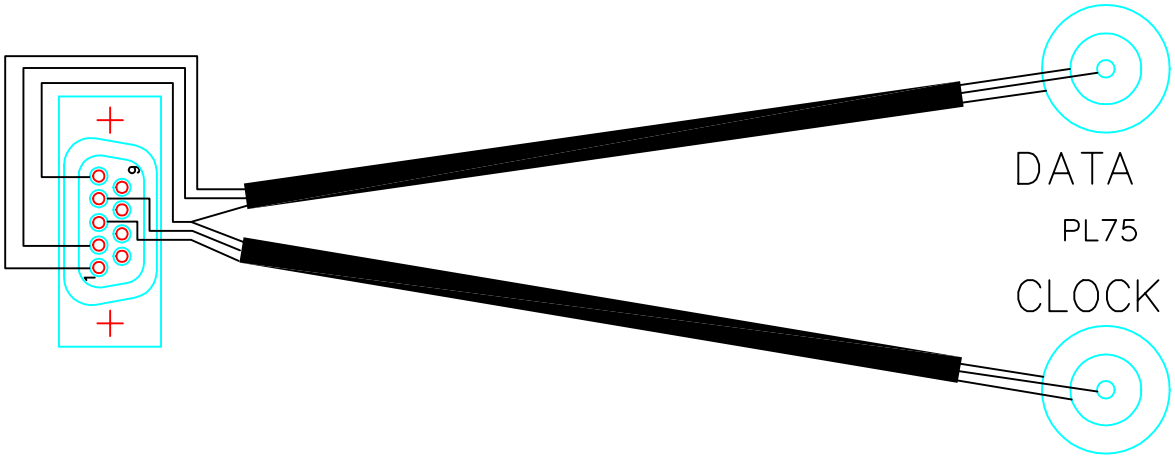

BRIDGE RECEIVER/DRIVER INPUT CABLE

9 PIN CONNECTOR (DE-9S)

FM	TO		SIGNAL		COLOR
5	A/B	SHIELD	RET		
1	A	TIP	DATA	A	BLUE
2	A	RING	DATA	B	CLEAR
3	B	TIP	CLOCK	A	BLUE
4	B	RING	CLOCK	B	CLEAR

EC-8312
Figure 5-8

FILE: EC8312 – BRCBLIN.DWG

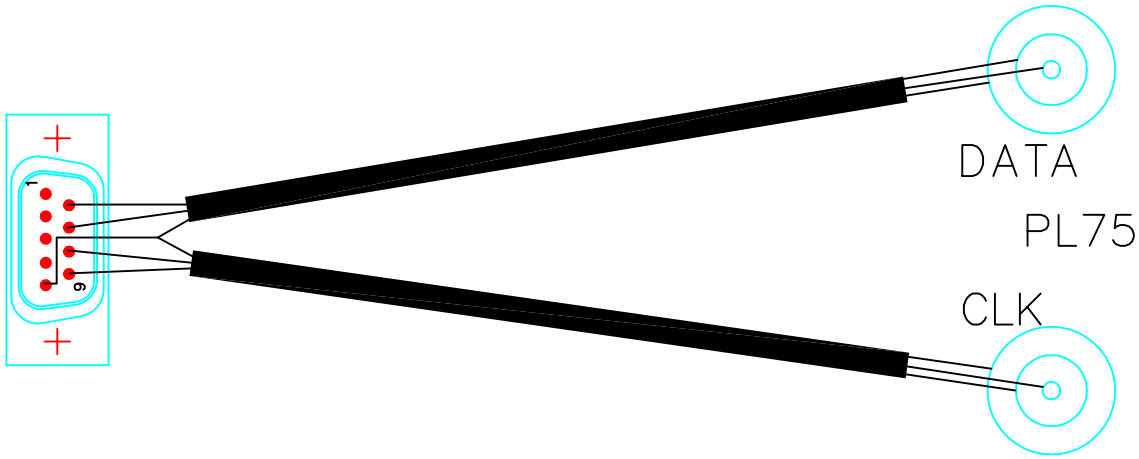

BRIDGE RECEIVER/DRIVER OUTPUT CABLE

9 PIN CONNECTOR (DE-9P)

FM	TO		SIGNAL		COLOR
5	A/B	SHIELD	RET		
6	A	TIP	DATA	A	BLUE
7	A	RING	DATA	B	CLEAR
8	B	TIP	CLOCK	A	BLUE
9	B	RING	CLOCK	B	CLEAR

EC-8312
Figure 5-9

FILE: EC8312 - BRCBLOUT.DWG

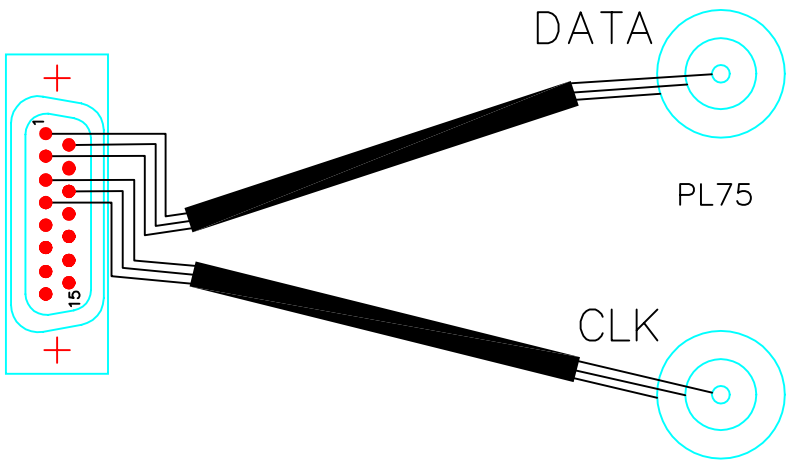

15 PIN CONNECTOR (DE-15P)

FM	TO	SIGNAL	COLOR
1	DATA TIP	DATA A	BLUE
9	DATA RING	DATA B	CLEAR
2	DATA SHLD	RET	
3	CLK TIP	CLOCK A	BLUE
11	CLK RING	CLOCK B	CLEAR
4	CLK SHLD	RET	

FORWARD SERVICE SWITCH CABLE (INPUT AND OUTPUT)

EC-8312
Figure 5-10

FILE: EC8312 - FWDCBLS.DWG

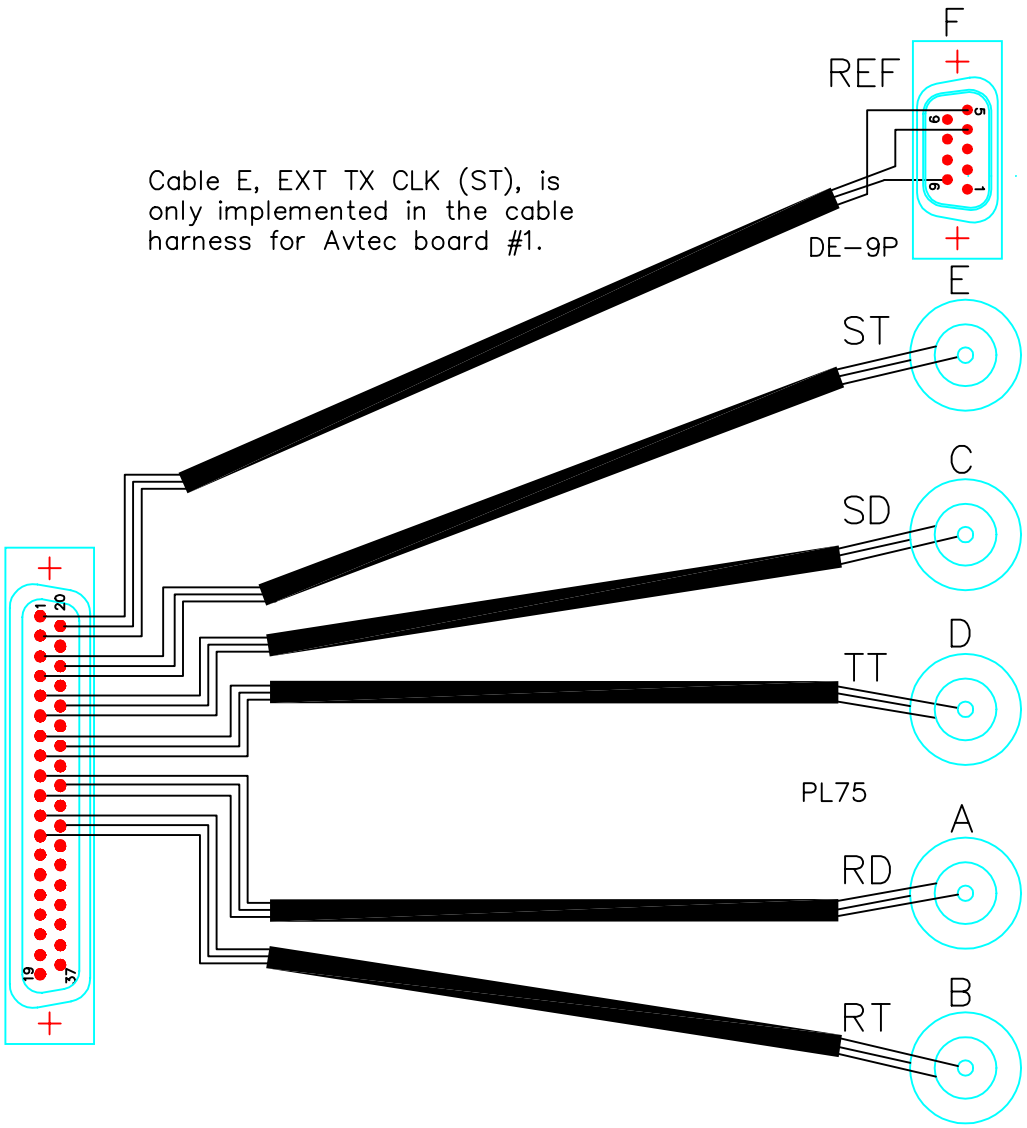

37 PIN CONNECTOR (DC-37P)

FM	TO	SIGNAL	COLOR
1	REF TIP	5MHZ CLOCK+	BLUE
2	REF RING	5MHZ CLOCK-	CLEAR
20	REF SHLD	RET	
3	ST RING	EXT TX CLOCK+	CLEAR
4	ST TIP	EXT TX CLOCK-	BLUE
22	ST SHLD	RET	
5	SD RING	TX DATA+	CLEAR
6	SD TIP	TX DATA-	BLUE
24	SD SHLD	RET	
7	TT TIP	TX CLOCK+	BLUE
8	TT RING	TX CLOCK	CLEAR
26	TT SHLD	RET	
9	RD RING	RX DATA+	CLEAR
10	RD TIP	RX DATA-	BLUE
28	RD SHLD	RET	
11	RT TIP	RX CLOCK+	BLUE
12	RT RING	RX CLOCK-	CLEAR
30	RT SHLD	RET	

PTP MONARCH CABLE

EC-8312
Figure 5-11

FILE: EC8312 - Monarch Cable.DWG

DB - 422/485-8
Digital Bridge

9 Pin D Subminiature Connectors,
pin 2 = +DATA, pin 3 = -DATA,
pin 4 = +CLK, pin 5 = -CLK,
pin 6 = Signal Ground.

Receives 5MHz from spare Austron port
and buffers it to eight output ports.

EC-8312
Figure 5-12

AUSTRON 5 MHZ OUTPUT TO DB-422/485-8 BRIDGE INPUT

9 PIN CONNECTOR (DE-9P)

FM	TO	SIGNAL	COLOR
6	SHIELD	RET	
4	TIP	CLOCK A	CLEAR
5	RING	CLOCK B	BLACK

EC-8312
Figure 5-13

FILE: EC8312 - BRCBLOUT.DWG

Table 5-1
WDISC COM Port Cabling Pinouts

PTP COM Port - to - 2PK-AB-T1 Switches

Signal	DB25P (DCE)	Signal	DB25S (DTE)
GND	1	GND	1
TxD	2	RxD	3
RxD	3	TxD	2
RTS	4	CTS	5
CTS	5	RTS	4
DSR, DCD	6,8	DTR	20
SGND	7	SGND	7
DTR (Tied to +12V)	20	DSR	6

Note: The CodePAL section must be programmed to Terminal mode.

- Using a terminal emulation program on the PTP, select the COM1, 3, or 4 port (switch 1, 2, 3 respectively). Use 9600 baud, 8-bits, no parity, hardware handshaking.
- Press the ENTER key and a password prompt will appear. The logon password is SN.
- After logon, enter 3 for Programming and verify the following settings:
  1. Device Labels
  2. Password
  3. Baud: 9600
  4. Parity/Data: N,8
  5. Lead: Y
  6. Resp: Y
  7. Mode: Terminal
  8. Cycle Time: 5
  9. Time out: 0

  X Exit
- Enter X to leave Setup and X again to logoff.
- If the Mode was changed from Modem (incorrect setting) to Terminal (correct setting), you must cycle the power on the CodePAL to make it respond to Terminal mode.
- Switch commands are <ESC>SN1A and <ESC>SN1B. Do not use a carriage return!