501-603/STARLink

MISSION OPERATIONS AND DATA SYSTEMS DIRECTORATE

Mission Operations Support Plan for the STARLink Project

September 1995

National Aeronautics and Space Administration

Goddard Space Flight Center
Greenbelt, Maryland

Mission Operations Support Plan for the STARLink Project

September 1995

Prepared by:

Donald W. Gates, Jr. Date
STARLink Mission Manager
AlliedSignal Technical Services Corporation

Approved by:

Mark E. Ambrose Date
STARLink Mission Support Manager
Mission Management Office, Code 501
Goddard Space Flight Center

Goddard Space Flight Center
Greenbelt, Maryland

Preface

The purpose of this Mission Operations and Data Systems Directorate (MO&DSD) Mission Operations Support Plan (MOSP) for the Satellite Telemetry and Return Link (STARLink) is to provide operational procedures and configuration information required by the MO&DSD elements during MO&DSD support to the STARLink mission. Standard procedures for intra-element and inter-element operations are defined in applicable documents shown in the appendix. Where conflicts exist with other documents, the provisions of this document take precedence. The primary function of the STARLink MOSP is to describe how the planned and implemented MO&DSD support system will be operated during nominal, critical, emergency, and contingency operations.

The configuration information contained in this document includes both automated data base contents and manual configuration instructions as appropriate to the element. In providing this mission-unique information, this document forms the point of control for automated data bases in use in the MO&DSD and for the manual configuration required.

This issue of the MOSP has been developed to accommodate the needs of MO&DSD operations supporting STARLink. When appropriate, this document will be upgraded by revision or reissue to document MO&DSD operations phase information. This document may contain To Be Supplied (TBS) items, or items that at the time of publication are assumed to be correct. Any TBS items or corrections will be incorporated by the Document Change Notice (DCN) process.

Between revision or reissue cycles, all changes to this document, and thus to the data bases, manual configuration, and mission-unique procedures contained herein, will be made by DCN. At present, the procedures defined within the *Network Operations Control Center and Station Interface Procedures*, STDN No. 502.16, with the exception of the DCN approval cycle, will be used for DCN implementation. DCNs to this issue of the document will be coordinated with the appropriate MO&DSD line organizations and approved by the Goddard Space Flight Center (GSFC) Mission Management Office, Code 501.

Questions from the MO&DSD elements or project organizations concerning the information contained in this document should be transmitted to the Network Control Center (NCC) using Request for Information or Clarification (RIC) procedures as defined in STDN No. 502.16. RICs or DCN responses will be coordinated through Code 501.

All other questions or comments regarding this document may be addressed to:

NASA/Goddard Space Flight Center
Code 501/ATSC Program Advanced Planning - GCP
7515 Mission Drive
Lanham, Maryland 20706
Attention: D. Gates (301) 805-3310

Abstract

The purpose of this Mission Operations and Data Systems Directorate (MO&DSD) Mission Operations Support Plan (MOSP) for the Satellite Telemetry and Return Link (STARLink) is to provide operational procedures and configuration information required by the MO&DSD elements during MO&DSD support. Standard procedures for intra-element and inter-element operations are defined in applicable documents shown in the appendix. Where conflicts exist with other documents, the provisions of this document take precedence. The primary function of the STARLink MOSP is to describe how the planned and implemented MO&DSD support system will be operated during nominal, critical, emergency, and contingency operations.

Keywords: *STARLink, MOSP, MO&DSD*

Change Information Page

List of Effective Pages			
Page Number	**Issue**	**Page Number**	**Issue**
Title	Original	10-1/(10-2 blank)	Original
iii through xvi	Original	11-1 through 11-5/(11-6 blank)	Original
1-1 through 1-17/(1-18 blank)	Original	12-1/(12-2 blank)	Original
2-1 through 2-6	Original	13-1/(13-2 blank)	Original
3-1/(3-2 blank)	Original	14-1 through 14-5/(14-6 blank)	Original
4-1/(4-2 blank)	Original	15-1 and 15-2	Original
5-1 through 5-16	Original	16-1 and 16-2	Original
6-1/(6-2 blank)	Original	17-1/(17-2 blank)	Original
7-1/(7-2 blank)	Original	A-1 and A-2	Original
8-1 and 8-2	Original	AB-1 through AB-7/(AB-8 blank)	Original
9-1/(9-2 blank)	Original		

Document History			
Document Number	**Status/Issue**	**Publication Date**	**CCR Number**
501-603/STARLink	Original	September 1995	N/A

DCN Control Sheet

DCN Number	Date/Time Group (Teletype Only)	Month/ Year	Section(s) Affected	Initials

Contents

Preface

Abstract

Section 1. Mission Operations Overview

1.1 Mission Description 1-1

1.1.1 General 1-1

1.1.2 Objectives 1-5

1.2 Mission Management Description 1-5

1.2.1 General 1-5

1.2.2 STARLink Management Responsibilities Structure 1-5

1.3 Mission Operations Ground Support 1-6

1.3.1 General 1-6

1.3.2 Flight Operations 1-6

1.3.3 Ground System Facilities 1-6

1.3.4 STARLink Operations Philosophy 1-9

1.4 Typical Experiment Descriptions 1-10

1.5 Launch Operations 1-11

1.5.1 General 1-11

1.5.2 Launch Vehicle Description 1-11

1.5.3 Prelaunch Support Description 1-13

1.5.4 Mission Simulation and Readiness Training Overview 1-13

1.5.5 Launch Site Tests 1-13

1.5.6 Launch Verification 1-14

1.5.7 Launch Communications 1-14

1.6 Mission Operations Scenario 1-14

1.6.1 General 1-14

1.6.2 Telemetry Functions 1-14

1.6.3 Telemetry Data Formats 1-15
1.6.4 Timing Requirements 1-15
1.6.5 Command Functions 1-15
1.6.6 Command Data Format 1-15
1.6.7 Command Encoding/Decoding 1-15
1.6.8 Tracking 1-15
1.7 Mission Operations and Data Systems Directorate Support 1-16
1.7.1 General 1-16
1.7.2 Space Network 1-16
1.7.3 Network Control Center 1-16
1.7.4 White Sands Complex 1-16
1.7.5 Flight Dynamics Facility 1-16
1.7.6 NASA Communications 1-17
1.7.7 Mission Status Period 1-17

Section 2. Project Operations Control Center

2.1 STARLink Operations Control Center 2-1
2.2 STARLinkOCC Equipment 2-1
2.2.1 Standard Equipment 2-1
2.2.2 Equipment Configuration 2-1
2.2.3 Data Recording 2-1
2.3 STARLink Scheduling 2-3
2.4 POCC Interfaces 2-3
2.4.1 General 2-3
2.4.2 POCC/NCC Interface 2-3
2.4.3 POCC/SN Interface 2-5
2.4.4 Interface Configuration 2-5
2.4.5 Voice and Data Circuits 2-5
2.5 Equipment Maintenance 2-6
2.6 Data Base Control 2-6

Section 3. Command Management Facility

Section 4. Shuttle/POCC Interface Facility

Section 5. NCC Operations

5.1 General 5-1

5.2 NCC Operational Interface Procedures for STARLink 5-1

5.2.1 General 5-1

5.2.2 Scheduling Procedures 5-1

5.2.3 Coordination Procedures 5-1

5.2.4 Voice Callsigns 5-11

5.3 NCC Data Base Information 5-12

5.3.1 Configuration Codes 5-12

5.3.2 Configuration Code Change Procedure 5-12

5.4 Fault Isolation and Monitoring Procedures 5-15

5.4.1 General 5-15

5.4.2 NCC Operations Management 5-15

5.4.3 Guidelines 5-15

5.4.4 Methodology 5-16

Section 6. NASA Ground Terminal Operations

Section 7. White Sands Ground Terminal

Section 8. White Sands Complex

8.1 General 8-1

8.2 Detailed Support Definition 8-1

8.2.1 TDRSS Service Use 8-1

8.2.2 KSA/Tracking/ETE Services 8-1

Section 9. Ground Network

Section 10. Special Support

Section 11. Nascom Operations

11.1 General 11-1

11.2 Nascom Resources 11-1

11.2.1 General 11-1

11.2.2 Type-2 Data Interfaces 11-1

11.3 Resource Scheduling Procedures 11-4

11.3.1 General 11-4

11.3.2 Scheduling by NCC for Real-Time Type-2 Data Interfaces 11-4

11.4 Operations and Coordination Procedures 11-4

11.4.1 General 11-4

11.4.2 Type-2 Data Events 11-4

11.4.3 Fault Isolation/Circuit Restoration Procedures 11-5

Section 12. Flight Dynamics Facility

12.1 General 12-1

12.2 Acquisition Data 12-1

12.3 Electronic Mail Addresses 12-1

Section 13. Sensor Data Processing Facility

Section 14. Testing

14.1 Testing and Simulations 14-1

14.1.1 General 14-1

14.1.2 Scheduling 14-1

14.1.3 Briefing Messages 14-1
14.2 Testing and Verification Responsibility 14-1
14.3 Tests and Simulation Types 14-1
14.4 Engineering Testing 14-2
14.4.1 Objectives 14-2
14.4.2 Test Description 14-2
14.5 Verification Testing 14-2
14.6 Operational Readiness Testing 14-2
14.6.1 Test Objective 14-2
14.6.2 Test Description 14-2
14.7 Test Participants 14-3
14.7.1 On-site GSFC Participants 14-3
14.7.2 Off-site Participants 14-3
14.8 Test Scheduling 14-3
14.9 Test Criteria 14-3
14.9.1 Verification/Validation/Quality Check 14-3
14.9.2 Reports 14-4

Section 15. Data Management

15.1 General 15-1
15.2 Data Disposition Instructions 15-1

Section 16. STDN Interface Teletype Headers

16.1 General 16-1
16.2 Administrative Message System 16-1
16.3 Sending Messages on the AMS 16-1
16.4 Receiving Messages for the AMS 16-2

Section 17. Television Support

Figures

1-1 STARLink System 1-2
1-2 Forward Link Diagram 1-7
1-3 Return Link Diagram 1-8
1-4 STARLink Launch Vehicle (ER-2) 1-12
2-1 STARLinkOCC Equipment Configuration 2-2
2-2 STARLink POCC Mission Support Functional Interfaces 2-4
5-1 NCC Operations Positions 5-2
11-1 Nascom Interfaces for STARLink TDRSS Support 11-2

Tables

1-1 STARLink Mission Characteristics (Typical) 1-3
1-2 STARLink Transmitted Frequency Utilization Summary 1-4
1-3 STARLink Receiver Frequency Utilization Summary 1-4
1-4 SN Link Requirements 1-17
2-1 Data Circuit Assignments 2-6
5-1 KSA Return Link Configuration Codes 5-13
5-2 Forward Link Configuration Codes 5-13
5-3 End-to-End (Simulation) Configuration Codes 5-13
15-1 NCC Data Requirements and Disposition 15-1
15-2 Nascom Data Disposition Instructions 15-2

Appendix. List of References

Abbreviations and Acronyms

Section 1. Mission Operations Overview

1.1 Mission Description

1.1.1 General

1.1.1.1

Satellite Telemetry and Return Link (STARLink) is a real-time airborne science and disaster assessment system on board the Lockheed ER-2 (see Figure 1-1). The system will lower the number of scientists and technicians in the field by allowing the engineering and science teams at home the ability to support, control, adjust, or repair their instruments in flight. The audio link will allow the chief scientist, through the mobile pilot, to redirect the mission once airborne or support the flying pilot in an emergency. The ER-2 can carry numerous instruments on a single flight to altitudes above 65,000 feet and outside 95 percent of the Earth's atmosphere. A maximum of 2600 lbs can be distributed between the equipment bay, the nose area, and the wing pods.

1.1.1.2

The STARLink Project will utilize the Space Network (SN) for establishing telecommunication links between STARLink payloads and the STARLink Operations Control Center (STARLinkOCC). Telecommunication needs of science experiments will vary. Flight Operations telecommunications needs are for continuous telemetry in conjunction with commanding services. The STARLink Project plans for the Tracking and Data Relay Satellite System (TDRSS) to support the missions through the TDRSS K-band Single Access (KSA) forward and return link. Table 1-1 provides the mission characteristics. Tables 1-2 and 1-3 provide the frequency utilization summary for the mission.

1.1.1.3

STARLink operates from various locations around the globe. A typical non-emergency mission with a duration of 1 to 2 weeks will be scheduled according to standard Network Control Center (NCC) scheduling and operations guidelines. During this period, the aircraft will operate an average of 8-10 hours a day. There may be emergency missions such as natural disaster assessments that will need TDRSS links with minimum advance scheduling. Such missions may require as little as 4 hours advance notice and scheduling. STARLink will have an average of 10 to 20 missions per year including emergency missions.

1.1.1.4

The STARLinkOCC will be located at the Ames Research Center (ARC) in Moffet Field, California, and will be the focal point for support of all STARLink flights. The STARLinkOCC will function as a TDRSS Project Operations Control Center (POCC) and supply other non-TDRSS functions specific to STARLink flight support needs.

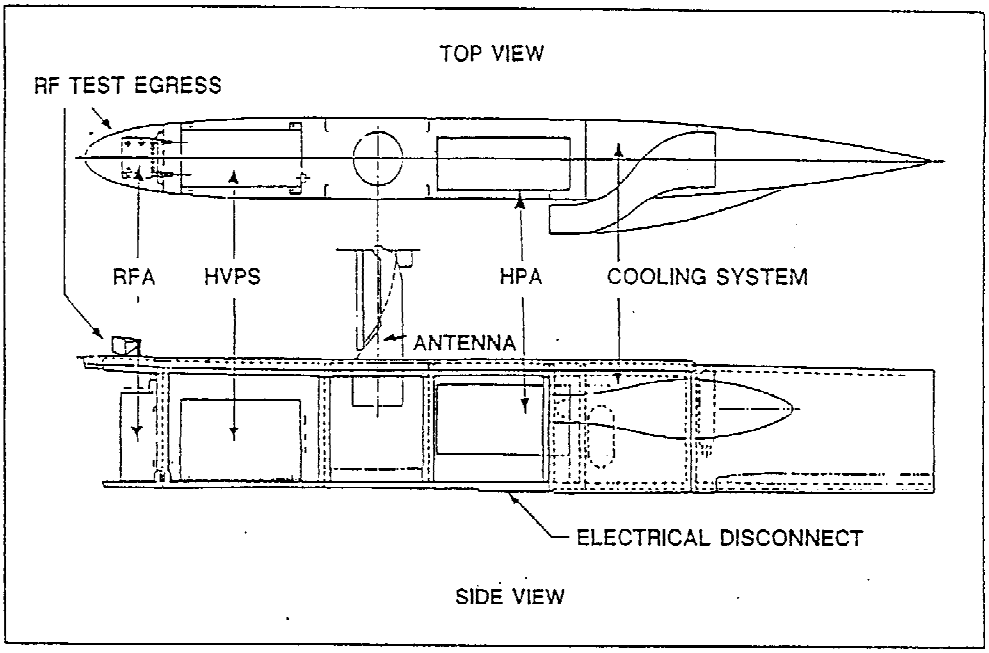

PYLON EQUIPMENT CONFIGURATION

Figure 1-1. STARLink System

Table 1-1. STARLink Mission Characteristics (Typical)

Item	Characteristics
Launch system:	Lockheed ER-2
Duration	1 to 10 hours
Altitude	Up to 70,000 feet
Landing site (primary)	Intended to be conducted at or near the original launch site.
Communications:	
Routine	TDRSS K-band
Emergency	To be Determined (TBD)
Telemetry	294.912 Mb/sec Real-time
Data Coding	Reed-Solomon (RS) Code, Staggered Quadriphase Shift Keying (SQPSK)
Command	400 kb/sec
Tracking:	
Transmit Frequency:	15.0034 GHz
Receive Frequency	13.775 GHz

Table 1-2. STARLink Transmitted Frequency Utilization Summary

Transmitted Frequency	Mission Characterization	Modulation	Data	Antenna	Purpose and Remarks
15.0034 GHz	KSA Service DG2	SQPSK SQPSK	I Channel: Real-time telemetry at 147.456 Mb/sec Q Channel: Real-time telemetry at 147.456 Mb/sec	High Gain Antenna (HGA)	Normal Mode: Continuous real-time telemetry.

Table 1-3. STARLink Receiver Frequency Utilization Summary

Receiver Frequency	Mission Characterization	Data	Antenna	Purpose and Remarks
13.775 GHz	KSA	400 kb/sec	HGA	TDRSS KSA command support

1.1.2 Objectives

The primary mission objectives of the STARLink are to:

a. Provide real-time/near real-time digitized image, voice, and video data for scientists and engineers via the TDRSS.

b. Provide near real-time data processing of image data for primary disaster coordinators. For example, STARLink would give the fire chief near real-time infrared image data to determine hot spots. The same is true when supporting earthquake, hurricane, and flood assessment information for Federal Emergency Management Agency (FEMA).

1.2 Mission Management Description

1.2.1 General

The information in this section outlines the STARLink Project management structure and responsibility for the overall management of the STARLink missions, the spacecraft, and instrumentation.

1.2.2 STARLink Management Responsibilities Structure

1.2.2.1

The National Aeronautics and Space Administration's (NASA) Office of Space Science and Applications, in Washington, D.C., is responsible for the overall direction of the STARLink program.

1.2.2.2

NASA ARC High Altitude Mission Branch (Code JOH) is responsible for project management, directing the development and manufacture of the spacecraft, and the proper integration of all its system elements to ensure efficient operation.

a. The STARLink Project Manager, Mr. Andrew Roberts, is responsible for ensuring the performance of all functions necessary for the management of the project.

b. Mr. Gia Tran, ARC/ATAC, is the Mission Project Engineer and is responsible for ARC ER-2 telemetry, ARC ground stations, and POCC/NCC communications.

1.2.2.3

Goddard Space Flight Center (GSFC), Greenbelt, Maryland, has designated management responsibility for:

a. Ground system operations.

b. Overall vehicle acquisition.

1.2.2.4
The science payloads are integrated under ARC management.

1.2.2.5
The Mission Support Manager (MSM), Mr. Mark Ambrose, GSFC, Code 501 is responsible for GSFC Code 500 support to the STARLink Project.

1.3 Mission Operations Ground Support

1.3.1 General

The overall STARLink ground system support configurations are shown in Figures 1-2 and 1-3.

1.3.2 Flight Operations

1.3.2.1
The STARLink project will staff the STARLinkOCC and will operate the STARLink from prelaunch testing/simulations throughout the mission to provide analysis and control support.

1.3.2.2
Significant operational guidelines include, but are not limited to, the following:

a. STARLinkOCC will be staffed as mission requirements dictate.

b. Principal planning activities will occur from 4 weeks prior to the day of operation until 2 days before the operation.

c. Onboard functions will be provided with ground commandable overrides.

d. Housekeeping data will be transmitted with the science data.

e. All STARLink data received at the STARLinkOCC and all commands transmitted to the STARLink will be recorded.

1.3.3 Ground System Facilities

1.3.3.1
STARLink data is received via the SN. The SN will provide real-time data acquisition and the command interface. No Ground Network (GN) or Deep Space Network (DSN) support is required.

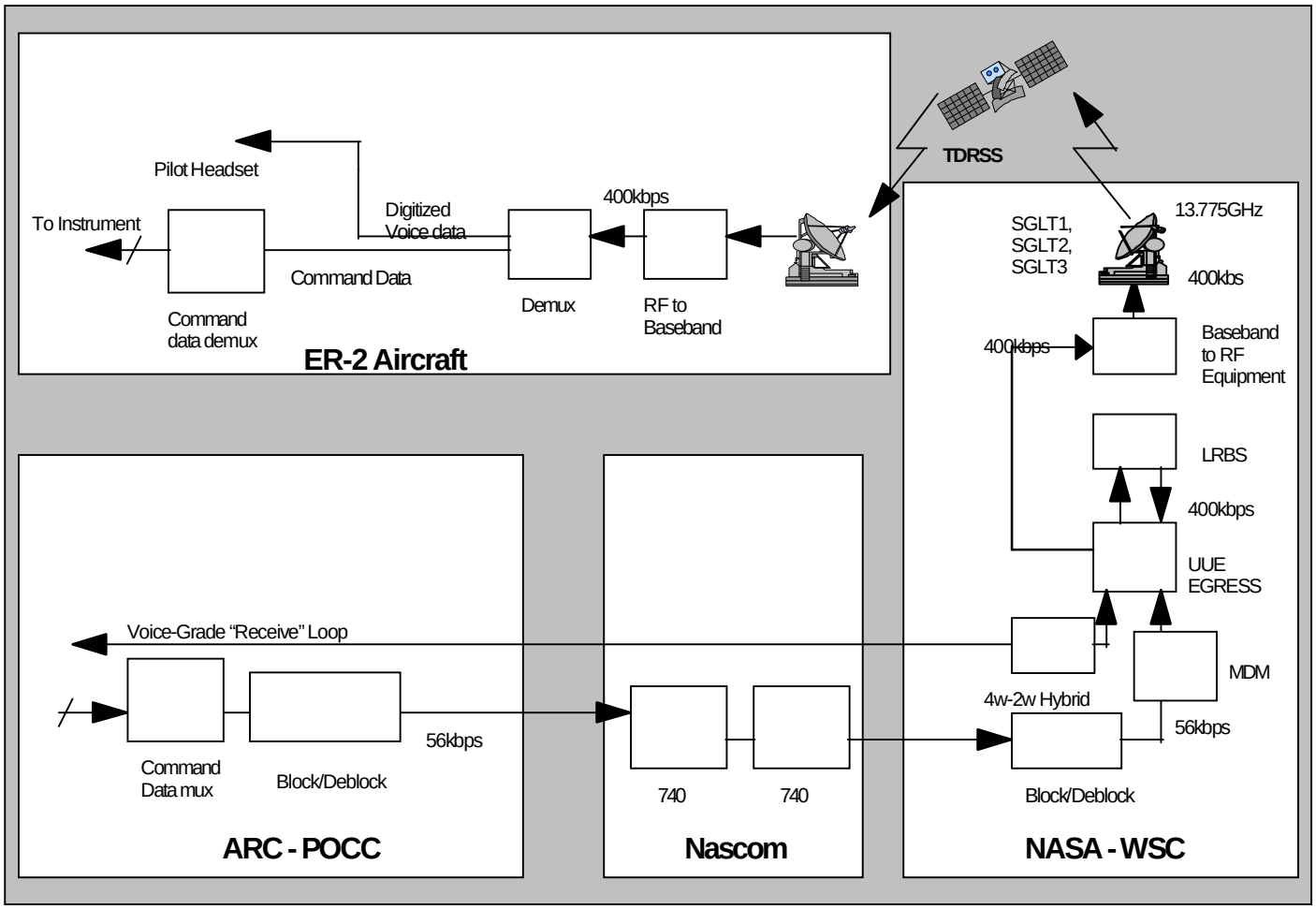

Figure 1-2. Forward Link Diagram

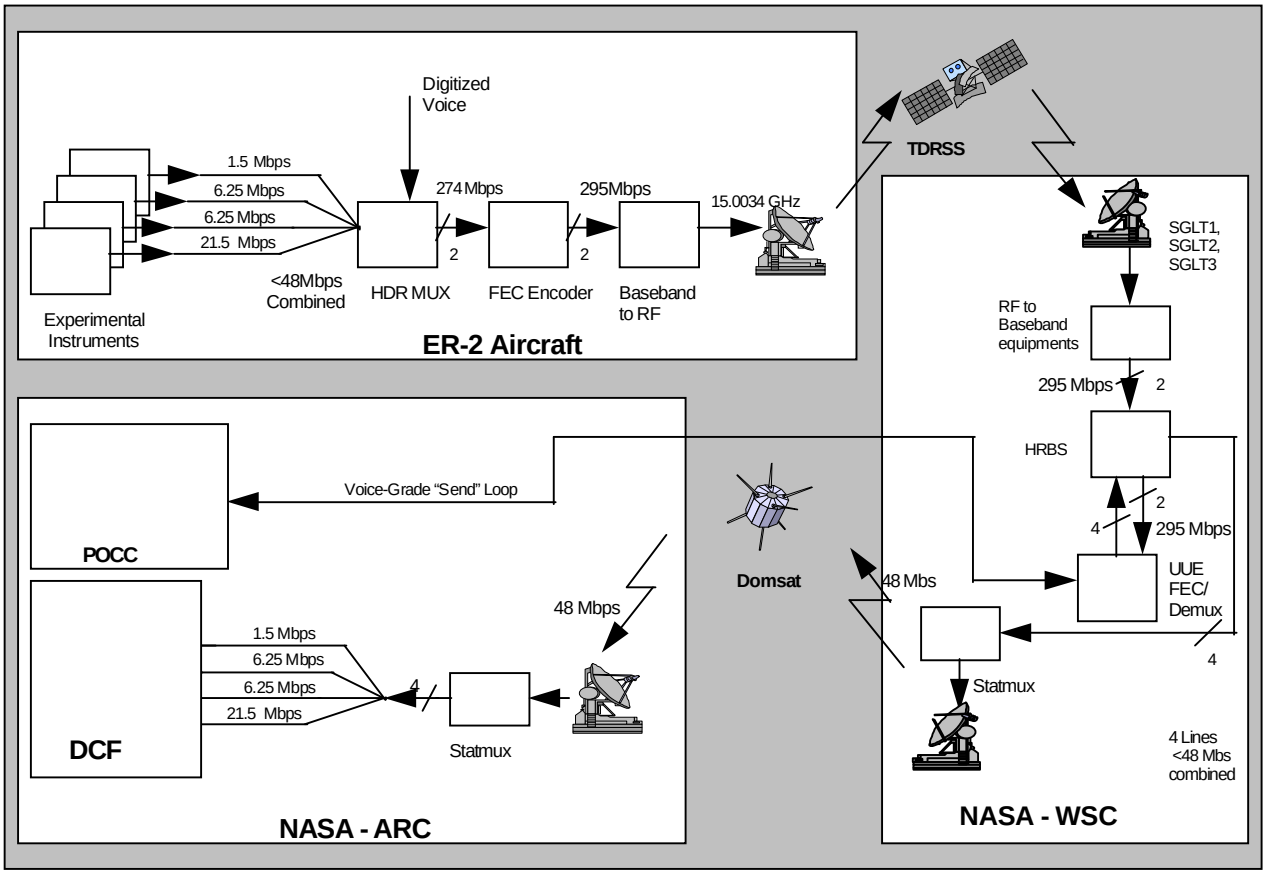

Figure 1-3. Return Link Diagram

1.3.3.2
The STARLinkOCC, will perform and participate in mission planning, real-time telemetry evaluation, offline analysis, and data base inputs. The STARLinkOCC will assist in discrepancy and enhancement reporting, software testing, orbit and attitude-data coordination, data accountability, and anomaly resolution.

1.3.3.3
The SN and STARLinkOCC will be interfaced via the NCC and NASA Communications (Nascom).

1.3.4 STARLink Operations Philosophy

1.3.4.1
A typical ER-2 mission begins with a short ground roll followed by a very high rate of climb at a high climb angle. Depending upon takeoff gross weight and planned mission endurance, the aircraft will reach the intermediate cruise altitude of 60,000 feet within 30 to 45 minutes of launch. At this point the cruise climb is initiated. While holding Mach number and engine exhaust temperature constant, the aircraft will steadily climb as fuel is burned off. The cruise climb is terminated at approximately 70,000 feet. The descent is generally initiated 30 minutes prior to landing.

1.3.4.2
STARLink real-time operations will consist of 1 to 10 hours in-view Tracking and Data Relay Satellite (TDRS) KSA support. The project will nominally schedule a 15-minute TDRS support approximately 2 hours and 15 minutes prior to take-off for a Radio Frequency (RF) check.

1.3.4.3
The forward link is used in the STARLinkOCC for real-time and stored command loading. The return link telemetry data is transmitted to STARLinkOCC, via Nascom, and processed and displayed at the STARLinkOCC in real-time. Real-time STARLink position and velocity information received by the STARLinkOCC from Global Positioning System (GPS) will be converted to Type-8 vectors and transmitted to the NCC.

1.3.4.4
The STARLink Communications System includes a STARLink Airborne Sub-System (SASS) data link which will communicate to TDRSS. The SASS data link equipment includes an Airborne Modem Assembly (AMA), RF Assembly (RFA), a High Voltage Power Amplifier (HPA), a High Voltage Power Supply (HVPS), and a High Gain Antenna Assembly (HGA). The SASS data link equipment components will be inside a pylon mount on the ER-2.

1.3.4.5
The positioning system includes a GPS receiver for primary positional data.

1.4 Typical Experiment Descriptions

1.4.1

The Cloud Lidar System is flown on the ER-2 to conduct radiation and severe storm field experiments. Designed to operate at high altitudes in order to obtain measurements above the highest clouds, the instrument provides the true height of cloud boundaries and the density structure of less dense clouds. The height structure of cirrus, cloud top density, and multiple cloud layers may also be profiled.

1.4.2

The Radiation Measurement System (RAMS) is an integrated system of several radiometers. The system provides airborne measurements to support analysis and theoretical calculations of cloud properties and radiation fields and to provide validation of satellite radiance measurements. The airborne instruments consist of the following:

a. An electrically calibrated pyroelectric radiometer for hemispherical, broad spectral bandpass, radiative flux measurements in the solar spectral region (0.26 to 2.6 µm). This radiometer has two detectors. One is located on the upper Q-bay hatch and the down-looking instrument is located on the lower E-bay hatch.

b. An Infrared (IR) net flux radiometer covering the spectral range from 5 to 40 µm. This radiometer is mounted on the S20 location on the right wing.

c. A narrow field-of-view, narrow spectral bandpass IR radiometer (two channels in the 5 to 40 µm region). This radiometer uses a liquid nitrogen cooled black body reference. This instrument provides upwelling infrared intensities above cloud. It is mounted on the lower Q-bay hatch.

d. A total-direct-diffuse multichannel narrow spectral bandpass (about 5 to 10 nm) flux radiometer. This radiometer is used for optical depth determinations and direct/diffuse ratios. The up-looking detector is mounted on the upper Q-bay hatch and the down-looking detector is located on the lower E-bay hatch.

e. The data system and radiometer electronics are located on the upper Q-bay rack.

1.4.3

The Modis Airborne Simulator (MAS) is a modified Daedalus multispectral scanner. It records up to twelve 8-bit channels, which can be selected from an array of 50 available spectral bands. The band selection is made prior to flight and the instrument is hard-wired to that configuration. Channel 1 is used to store additional bits which provide 10-bit resolution for channels 9 through 12.

1.5 Launch Operations

1.5.1 General

STARLink system configurations remain essentially unchanged from launch throughout the flight. The STARLink system is, therefore, equivalent to the flight vehicle (space vehicle).

1.5.2 Launch Vehicle Description

1.5.2.1 General

The ER-2 was developed for NASA, to serve as a high altitude scientific research platform. Powered by a single jet engine, the single seat ER-2 carries a single pilot and up to 2600 pounds of payload to altitudes approaching 70,000 feet. The ER-2 has been utilized to conduct scientific studies of stratospheric and tropospheric chemistry, geographic mapping, disaster assessment, and preliminary testing of space payload concepts. Typical ER-2 missions last 6 and one half hours and cover a range of 2200 nautical miles. It is possible to accomplish missions of up to 10 hours duration covering approximately 3000 nautical miles.

1.5.2.2 Payload Area

a. A maximum of 2600 pounds can be distributed between the equipment bay, the nose area, and the wing superpods. Figure 1-4 shows the primary payload areas available on the ER-2.

b. The primary payload compartment on the ER-2 is the equipment bay. Also known as the Q-bay, this compartment provides 64.6 cubit feet of volume and features removable upper and lower hatches. The upper and lower Q-bay hatches can be interchanged and configured to accommodate a wide variety of specialized sensors. The payloads are installed on a rack assembly which is hoisted into the Q-bay through the lower hatch opening and attached at structural points.

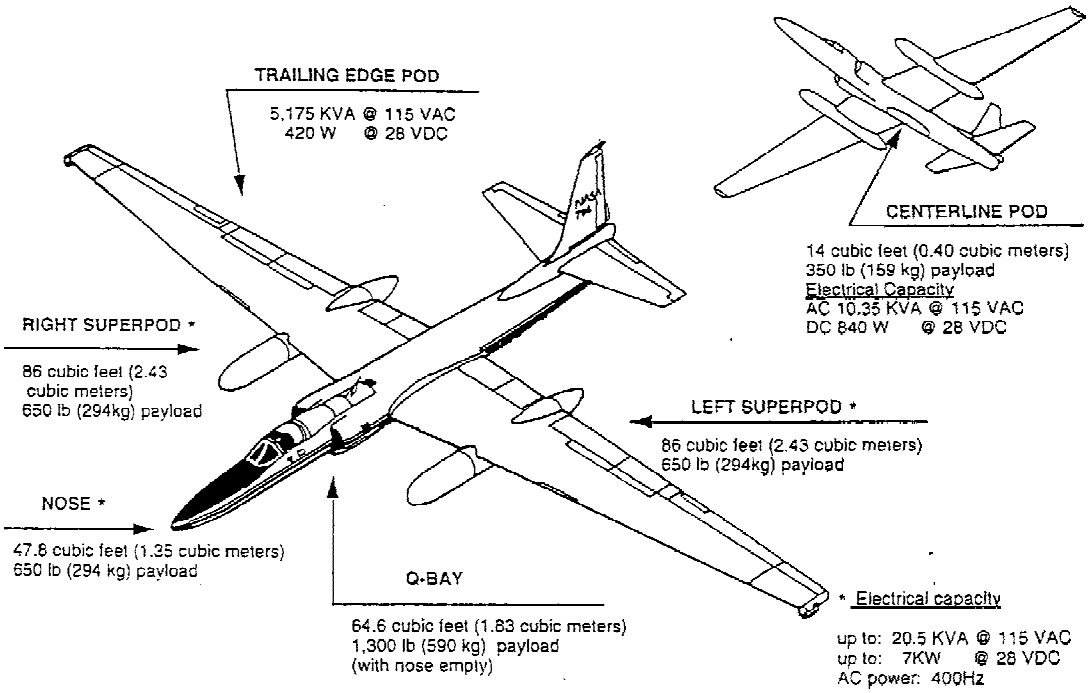

Figure 1-4. STARLink Launch Vehicle (ER-2)

c. Attached to the ER-2 fuselage, via four quick release latches, the nose area provides a payload volume of 47.8 cubic feet. The 101 inch long nose compartment accepts payloads of up to 650 pounds on custom built racks.

d. The wing superpods provide approximately 86 cubit feet of payload capacity. Each superpod may accommodate payloads up to a maximum weight of 650 pounds. The superpods consist of five individual segments. These are: the nose cone, forward pod, mid-body, aft pod, and tail cone. Normal separation points, via latches, are at the forward and aft ends of the superpod midbody.

1.5.3 Prelaunch Support Description

1.5.3.1

Support from the SN will be required during STARLink activities prior to operation. Other support required during these periods will consist of voice, command, and telemetry data lines via Nascom. All integration and testing will present the same operational interface to the STARLinkOCC as the TDRSS/Whites Sands Complex (WSC).

1.5.3.2

The POCC will contain the hardware and software necessary for the support of the mission. The operations personnel will use the POCC for training operations and all tests. The hardware and software development activities will be scheduled to provide the capabilities necessary for the successful completion of prelaunch tests. Personnel will be available to provide operations, fault isolation, and analysis support.

1.5.4 Mission Simulations and Readiness Training Overview

Mission simulations will verify the readiness of all elements to support the mission requirements, procedures, and data. Simulations will use actual operational scenarios with a timeline. Simulated failures may be introduced as a means of exposing all participants to realistic operational conditions. Failures will also exercise fault-isolation techniques and procedures.

1.5.5 Launch Site Tests

Launch site tests will interface the STARLink directly through TDRSS via the WSC to the ARC. The STARLink commands will be sent from the STARLinkOCC through Nascom to WSC to the STARLink via TDRSS. STARLink telemetry will be sent, via TDRSS, to the WSC and then to the STARLinkOCC (via the Statistical Multiplexer [Stat Mux]).

1.5.6 Launch Verification

The launch activities for STARLink will entail full POCC participation to acquire, configure, and activate the STARLink for stabilization, health, and safety.

1.5.7 Launch Communications

Launch communications will be handled by Nascom, with voice circuits configured between GSFC, ARC, and the STARLinkOCC, and between internal GSFC elements.

1.6 Mission Operations Scenario

1.6.1 General

This section provides an overview of the telemetry, command, and tracking operations of the STARLink mission.

1.6.2 Telemetry Functions

1.6.2.1

The STARLink telemetry system consists of 295-Mb/sec return and 400-kb/sec forward link using KSA services. The return data link is limited by the ground-to-ground (Stat Mux) communication between WSC and ARC. Thus, the effective return data link will have an upper limit of 48 Mb/sec data throughput.

1.6.2.2

The STARLink return data consists of four bit streams with a composite data rate less than or equal to 48 Mb/sec. See Figure 1-3 for return link detail. The output of these four bit streams will be bit-stuffed with the ER-2 High Data Rate (HDR) mux to make a 274.176-Mb/sec bit stream. This 274.176-Mb/sec bit stream is then Forward Error Correction (FEC) RS encoded to produce 294.912 Mb/sec bit stream. The amplified and modulated signal will be radiated to TDRSS relay at 15.0034 GHz. The STARLink RF signal will be received at WSC and converted to baseband for FEC decoding. STARLink-provided User Unique Equipment (UUE) at the WSC will FEC-decode the baseband signal and demux it into four bit streams. These outputs from the UUE will be fed into the High Rate Bit Sync (HRBS) which will in turn input to the WSC Stat Mux to make one (less 48 Mb/sec) bit stream. The 48-Mb/sec Stat Mux signal received at ARC building 240 is then demuxed to become four bit streams once again. The Data Capture Facility (DCF) at ARC in building 240 will decom and store these four baseband bit streams.

1.6.3 Telemetry Data Formats

STARLink Telemetry Generation Unit (TGU) Packet Format:

a. Each packet is 1536 bytes (512 24-bit words).

Bytes 0-2	Packet Group Number
Bytes 3-5	Packet Sequence Number
Bytes 6-8	Checksum
Bytes 9-11	Packet Group Number
Bytes 12-14	Packet Sequence Number
Bytes 15-17	Checksum
Bytes 18-20	Packet Group Number
Bytes 21-23	Packet Sequence Number
Bytes 24-26	Checksum
Bytes 27-1532	Packet Data (1506 bytes 502 24-bit words)
Bytes 1533-1535	Trailer Bits (0x555555)

b. Each major frame is divided into seven packets, with an eighth packet containing error correction data.

1.6.4 Timing Requirements

The STARLink clock will be maintained to $\pm$ 5 minutes of the GPS Universal Time Code (UTC).

1.6.5 Command Functions

The STARLink forward data consists of one 56-kb/sec bit stream and one two-pair voice-grade line. The 4800-bit blocked forward data stream (56 kb/sec) originated at ARC will be transported to GSFC via Nascom. WSC will receive and deblock this bit stream from GSFC. The received bit stream will input into the UUE at WSC. The UUE at WSC will mux this bit stream, the voice-grade signal, and other UUE generated data at WSC to make a 400-kb/sec bit stream. WSC will modulate and relay this bit stream to the ER-2 via TDRSS. The received signal will be demuxed on board the ER-2.

1.6.6 Command Data Format

This area to be implemented in December 1995.

1.6.7 Command Encoding/Decoding

Forward command link not yet determined.

1.6.8 Tracking

No tracking is provided by the SN.

1.7 Mission Operations and Data Systems Directorate Support

1.7.1 General

This section briefly defines the nominal Mission Operations and Data Systems Directorate (MO&DSD) support that each Spaceflight Tracking and Data Network (STDN) element provides for the mission. Specific operations scripts that define element activities and mission- specific inter-element procedures and configurations can be found in applicable sections of this document.

a. Space Network (SN).

b. Network Control Center (NCC).

c. White Sands Complex (WSC).

d. Flight Dynamics Facility (FDF).

e. NASA Communications Network (Nascom).

1.7.2 Space Network

Prime support for STARLink command and telemetry will be via the SN. The SN link requirements are defined in Table 1-4.

1.7.3 Network Control Center

The NCC will accept scheduling inputs from the STARLinkOCC TDRS Scheduling and Control System (TSCS) (a Mission Planning Terminal [MPT] equivalent), and provide a conflict free schedule to the STARLinkOCC and supporting elements.

1.7.4 White Sands Complex

The WSC will provide communications with each of the orbiting TDRSs, and a full complement of simulation and verification equipment for all user services.

1.7.5 Flight Dynamics Facility

The FDF will transmit TDRS Improved Interrange Vectors (IIRV) routinely to the NCC. In the event the TDRS IIRVs are not sufficient to meet the needs of the POCC, the NCC will request transmission of the necessary TDRS IIRV from FDF via electronic mail (E-Mail).

Table 1-4. SN Link Requirements

Return Link	Service	I Channel	Q Channel	Support
15.0034 GHz	KSA	Real-time telemetry at 147.456 Mb/sec	Real-time telemetry at 147.456 Mb/sec	Normal operational mode

Forward Link	Service	Command Data Rate	Support
13.775 GHz	KSA	400 kb/sec	Normal Command Support

1.7.6 NASA Communications

Nascom will provide all necessary data and voice communications support to meet the STARLink mission control and data operations requirements.

1.7.7 Mission Status Period

The transmission of Interim Support Instruction (ISI) 001 initiates the mission status period, and places the networks on STARLink mission status. The networks will remain on mission status until an ISI is sent to terminate mission status. Operational readiness tests are performed during the mission status period.

Section 2. Project Operations Control Center

2.1 STARLink Operations Control Center

The STARLink POCC is located in Building 240 at ARC. The STARLink POCC will have control of the ER-2 STARLink systems. Data storage and real-time voice and data communications will be performed at STARLink POCC. The STARLink POCC will support all STARLink missions. The STARLink POCC will maintain external communication via voice or computer link with GSFC NCC, Nascom, and Primary Investigators (PI) during normal, emergency, and test missions.

2.2 STARLinkOCC Equipment

2.2.1 Standard Equipment

The TSCS developed by GSFC (Code 510) will be used to interface the NCC with the STARLinkOCC.

2.2.2 Equipment Configuration

Figure 2-1 illustrates the STARLinkOCC equipment configuration.

2.2.3 Data Recording

Incoming STARLink telemetry data will arrive at the STARLinkOCC after the appropriate Nascom data line (Stat Mux) has been configured. All incoming and outgoing data will be recorded by the STARLinkOCC.

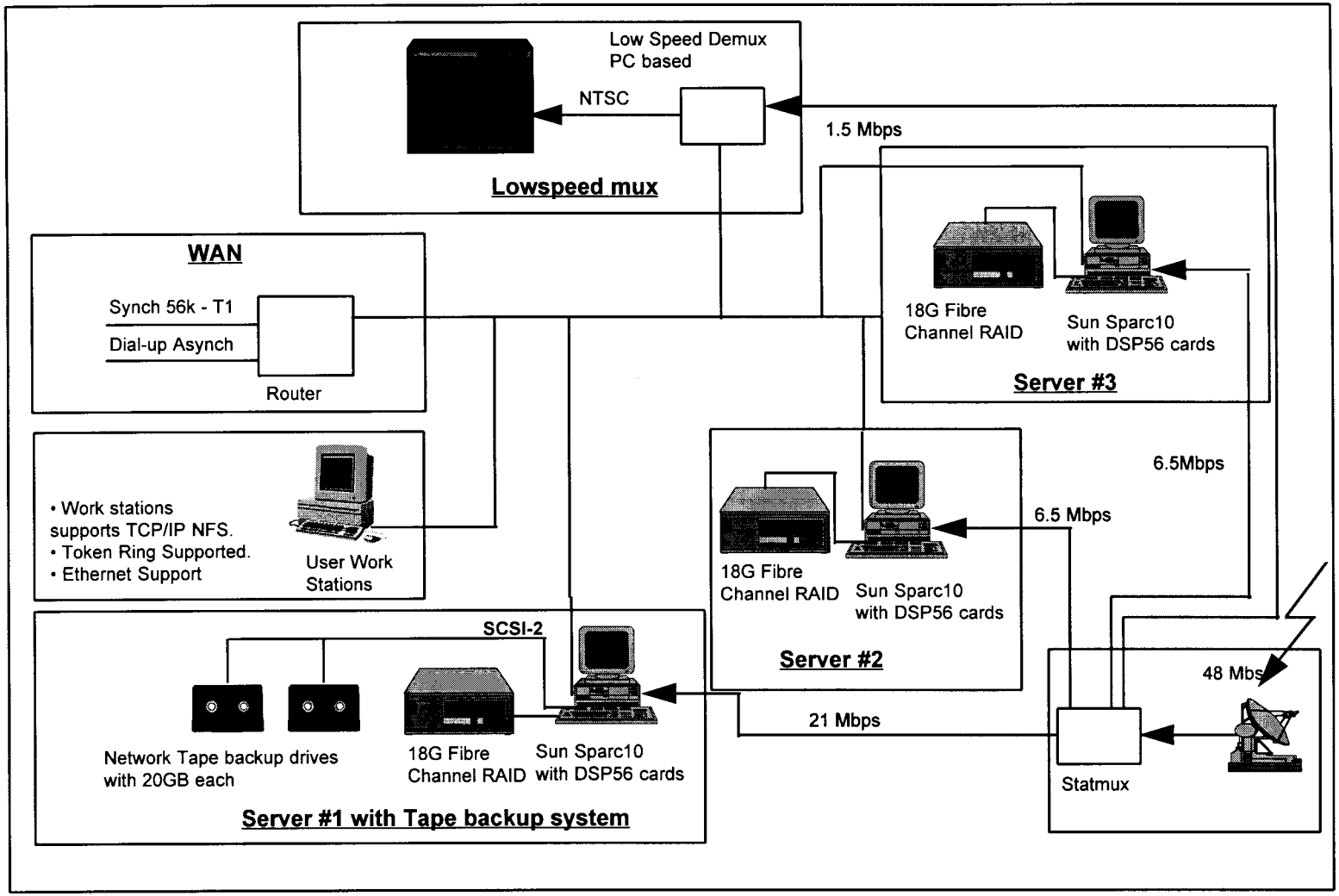

Figure 2-1. STARLinkOCC Equipment Configuration

2.3 STARLink Scheduling

STARLink scheduling will transmit Schedule Add Requests (SAR) and verify all STARLink support requests to the NCC through the TSCS. The NCC Scheduler will assist the mission planner in the resolution of any problem relating to the STARLink support schedule. STARLinkOCC scheduling will assist the operations personnel during emergencies and also inform them of any changes to the existing support schedule. The STARLinkOCC will adhere to the scheduling timeline and exercise procedures for normal and emergency support requests as documented in the *Operations Interface Procedures Between the Network Control Center and Spaceflight Tracking and Data Network Users*, 534-OIP-NCC/STDN Users.

2.4 POCC Interfaces

2.4.1 General

The STARLinkOCC will interface with external facilities via data lines and voice circuits to coordinate STARLink activities. Refer to Figure 2-2 for the functional interfaces that are needed to meet mission requirements.

2.4.2 POCC/NCC Interface

The STARLinkOCC online and offline systems will interface with the NCC to exchange schedules and status determination and service coordination messages. The offline system will interface with the NCC via the TSCS. The TSCS uses a 56-kb/sec circuit for exchanging schedule requests, data base queries, and acknowledgements. The online system will interface on a 56-kb/sec circuit, via TSCS, for the exchange of User Performance Data (UPD) and Ground Configuration Message Requests (GCMR). All exchanges will use the 4800-bit block formats as defined in the *Data Format Control Document Between the Goddard Space Flight Center Payload Operations Control Center and the Network Control Center Data System*, STDN No. 230.1. Procedures are defined in the *Data Format Control Document Between the Network Control Center Data Systems and Payload Operations Control Centers*, 530-DFCD-NCCDS/POCC.

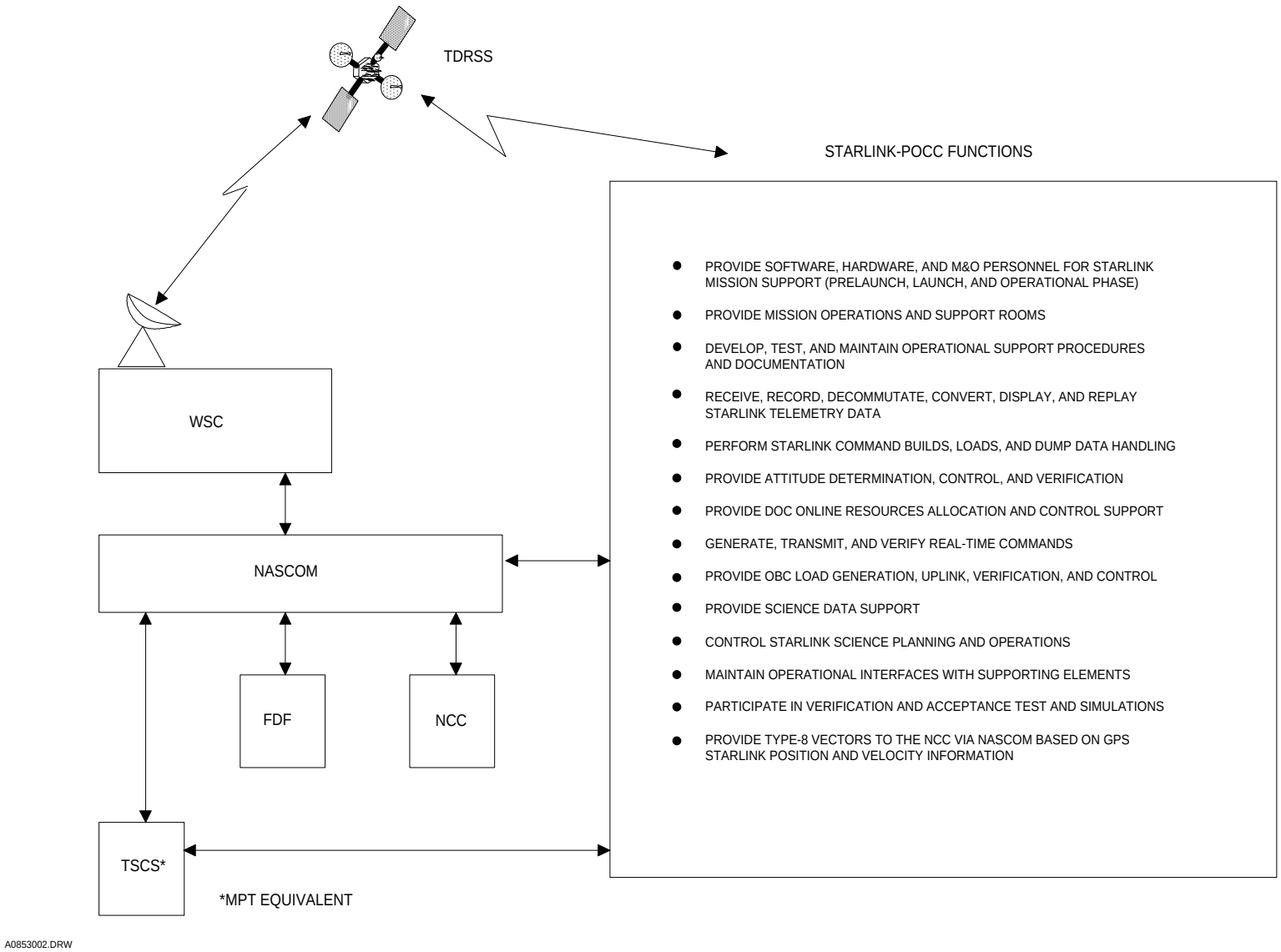

Figure 2-2. STARLink POCC Mission Support Functional Interfaces

2.4.3 POCC/SN Interface

a. The STARLinkOCC will interface with the SN via Switching, Conferencing, and Monitoring Arrangements (SCAMA) and commercial telephone services.

b. All telemetry and command data will be exchanged using the Nascom 4800-bit block formats or Stat Mux transmission service and forward and return links.

c. All STARLink data rates within the capability of the network will be accommodated.

2.4.4 Interface Configuration

The STARLinkOCC will interface with NCC personnel to perform STARLink operations. Areas of STARLinkOCC interaction on a routine basis are:

a. Scheduling interfaces to the NCC for SN support.

b. Generation of daily STARLinkOCC support schedules.

c. Real-time operational support.

d. Data line interface/configuration.

e. Troubleshooting/testing of data line problems.

f. Hardware/software maintenance.

g. Technical support.

h. Offline processing.

i. Data base maintenance support.

2.4.5 Voice and Data Circuits

Voice and data circuits will be configured during preparation for real-time support. Table 2-1 provides a list of the assignments for data circuits.

Table 2-1. Data Circuit Assignments

Data Line	Line Type	Purpose
UUE Status Line	9.6 kb/sec full-duplex asynchronous	WSC UUE status/information.
Message Switching System (MSS)	56 kb/sec full-duplex	Scheduling requests, GCMRs, Type-8 vectors, receipt of schedules, and UPD.
MDM Circuit Switched	56 kb/sec Simplex	Command
Statisical Multiplexer (STAT MUX)	48 Mb/sec Simplex	Telemetry

2.5 Equipment Maintenance

Hardware/software maintenance and technical assistance will be provided by the STARLinkOCC on an as-needed basis. Sufficient equipment will be available to properly support all STARLink real-time operations.

2.6 Data Base Control

The STARLinkOCC will contain a project-supported data base in support of STARLink control operations. The STARLinkOCC system will use the data base information to perform telemetry data handling and command activities. The data base will be updated as required according to project inputs.

Section 3. Command Management Facility

There will be no Command Management Facility (CMF) support required for the STARLink mission.

Section 4. Shuttle/POCC Interface Facility

There will be no Shuttle/POCC Interface Facility (SPIF) support required for the STARLink mission.

Section 5. NCC Operations

5.1 General

Information in this section provides procedures which are necessary for support of the STARLink mission.

5.2 NCC Operational Interface Procedures for STARLink

5.2.1 General

The NCC will provide management of resources for scheduling, controlling, and monitoring the performance of the STDN. This function includes control of all available network resources, schedule processing, conflict resolution, emergency scheduling, network testing, performance monitoring/fault isolation, acquisition data dissemination, and data base maintenance. In addition, the NCC is responsible for support of launch and real-time orbital operations, operational interfacing with STARLink, and ground configuration control. The NCC operations support area is shown in Figure 5-1. The STARLink/NCC interface is defined in the *Operations Interface Procedure Between the Network Control Center and Tracking and Data Network Users*, 534-OIP-NCC/STDN Users.

5.2.2 Scheduling Procedures

The NCC will receive specific SARs from the STARLink project. The interface between the NCC and STARLinkOCC will be provided by Nascom. Communications interface formats and protocol are documented in the 530-DFCD-NCCDS/POCC.

5.2.3 Coordination Procedures

5.2.3.1 General

NCC coordination procedures are contained in Section 7 of 534-OIP-NCC/STDN Users and this Mission Operations Support Plan (MOSP).

5.2.3.2 Voice Communication Coordination

a. Purpose. This procedure provides the methods for establishing voice communications between the user and NCC, as required for simulations, flight support, and administrative calls.

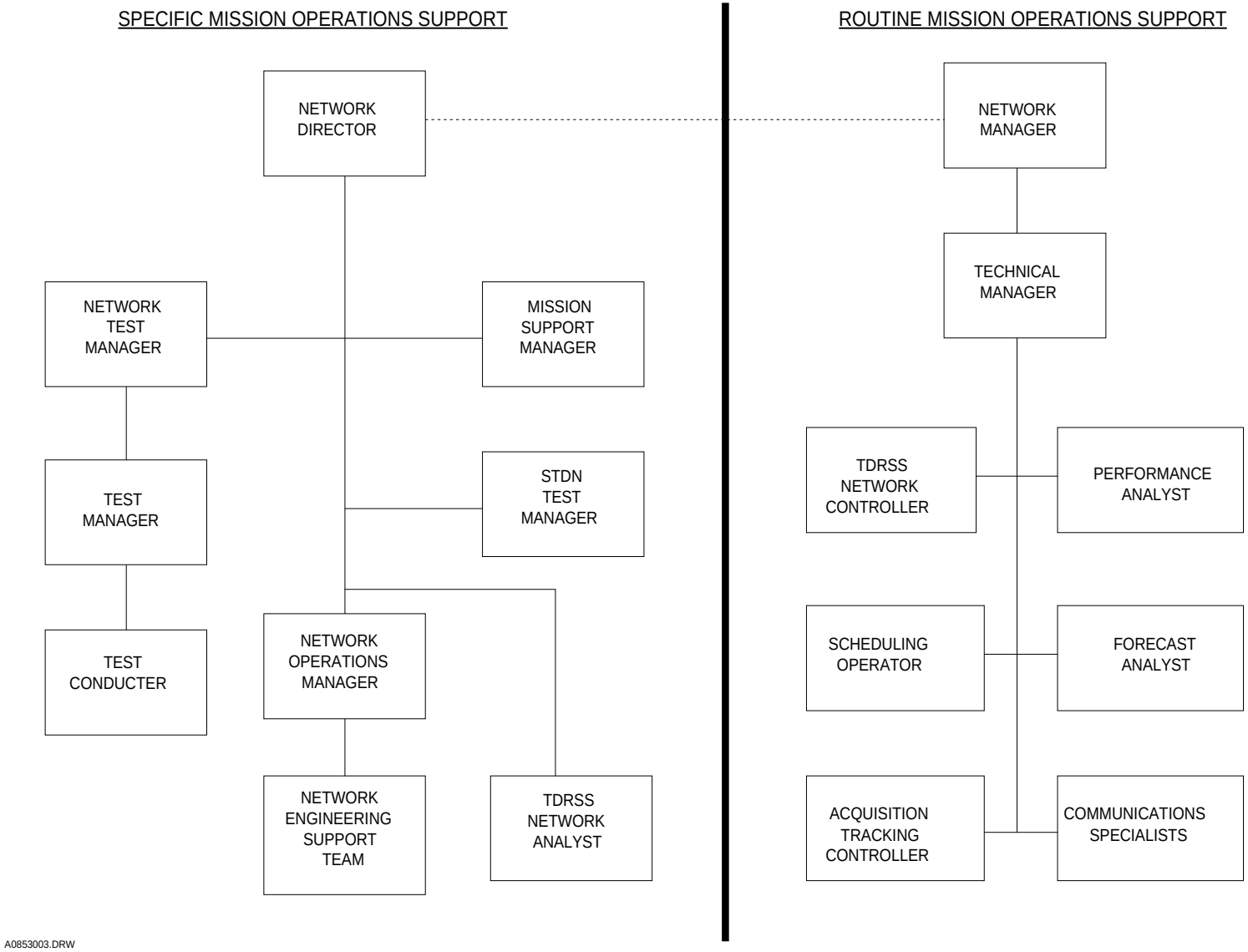

Figure 5-1. NCC Operations Positions

b. Participants

1. NCC: TDRSS Network Controller (TNC).

2. STARLinkOCC.

c. Procedure

1. Testing or Flight Support. For test activities or flight support with the SN, a full-period voice interface is maintained between the customer, the NCC, and the TDRS Operations Control Center (TOCC) for the duration of each event.

2. Administrative Calls. Administrative calls may be established by a POCC at any time; however, all requests for reports, retransmissions, or any other action items levied on a supporting entity will be coordinated through the NCC (not directly to the station).

5.2.3.3 Prepass/Pre-event Activities

a. Purpose. This procedure is used to define the support responsibilities and sequence of events to be used for support requiring a real-time interface between the networks and user.

b. Participants

1. NCC: TNC.

2. STARLinkOCC.

3. Nascom.

c. SN Interface Procedure

1. At 10 minutes prior to the start of a scheduled event, voice communications between the STARLinkOCC and TNC are established.

2. At 5 minutes prior to the event start time, the TNC transmits a communications test message (91.03) to STARLinkOCC to verify circuit readiness.

3. At 5 minutes prior to the event start time, the STARLinkOCC may transmit a user performance data request message (92.04) to the NCC to initiate transmission of user performance data.

4. The NCC automatically starts transmission of user performance data to STARLinkOCC upon receipt of Operations Data Messages (ODM) from WSC at the scheduled event start time.

5.2.3.4 Real-time Event Support

a. Purpose. This procedure defines the activities that are accomplished in support of a real-time event.

b. Participants

1. NCC: TNC.

2. STARLinkOCC: STARLink Control.

c. Procedure

1. At the scheduled start time of an event, the TNC verifies the acquisition of data and monitors network support status.

2. During the progress of the event, the STARLinkOCC monitors performance data messages as they are received from the NCC, and spacecraft data as it is received from the SN. The STARLinkOCC may transmit GCMRs to the NCC to reconfigure ground support equipment.

3. The TNC monitors the receipt of GCMRs and the transmission of Ground Control Messages (GCM).

4. Any problems noted during the progress of the event will be promptly reported to the TNC by STARLink Control.

5. Termination of an event at the scheduled stop time is verified and announced by the TNC. The TNC completes any debriefing required at this time, with STARLink Control, Nascom, and other supporting elements.

6. For Return Channel Time Delay, OPM-Class 52, when a Scheduling Order Data Message (SHO) includes a request for return channel time delay data. This message shall be used to send STARLinkOCC that data. The return channel time delay data will be obtained at the start and after the stop of the return service, and this data will be sent to STARLinkOCC after termination of the return service (automatically).

5.2.3.5 Verbal Relay of GCMRs

NOTE

This procedure is affected by security requirements.

a. Purpose. This procedure defines the methods used to communicate support requirements in the event of a failure of the data circuits between the STARLinkOCC and the NCC or between the NCC and WSC.

b. Participants

1. NCC: TNC.

2. STARLinkOCC: STARLink Control.

3. TOCC: Ops Controller.

c. Procedure

1. In the event of a failure of the STARLinkOCC/NCC data circuits during an ongoing event, STARLink Control will notify the TNC.

2. The TNC will, if required, accept verbal user GCMRs and construct and transmit GCMs at STARLink Control request.

3. The format for verbal reconfiguration requests must be strictly adhered to in order to facilitate the construction and transmission of the GCM (refer to the 530-DFCD-NCCDS/POCC. STARLink Control advises the TNC of the following:

(a) Type of GCM (e.g., reacquisition request).

(b) Station (TDE, TDW, or TDS).

(c) Spacecraft SUPIDEN.

(d) Service type (K-band Single Access Forward [KSAF]1, KSAF2, K-band Single Access Return [KSAR]1, or KSAR2).

4. The TNC advises STARLink Control when he has accessed the proper display and is ready to receive data.

5. STARLink Control advises the TNC of the field and changes to be made.

6. The TNC makes the change and reads back the new values to STARLink Control.

7. STARLink Control confirms that the data entered is correct.

8. If no further changes are to be made, the TNC transmits the GCM, upon direction from the STARLinkOCC, to WSC and advises STARLink Control when acknowledgement for the transmission is received from WSC.

9. If no reason for rejection is determined by the TDRSS, the GCM is processed; the NCC notes changes in the WSC DQM's, and STARLinkOCC notes changes in spacecraft data.

10. If the GCM is rejected by WSC, the TNC and STARLink Control coordinate correction and retransmission of the GCMR.

11. If a failure is detected between the NCC and WSC, coordination of GCMRs will be handled verbally between the NCC and WSC as stated in the *Operations Interface Procedures between the Goddard Space Flight Center Network Control Center and the Second TDRSS Ground Terminal*, 534-OIP-NCC/STGT.

5.2.3.6 Termination of an Ongoing Event

a. Purpose. This procedure defines the method by which STARLinkOCC may terminate ongoing events.

b. Participants

1. NCC:

(a) TNC.

(b) Scheduling Operator.

2. STARLinkOCC: Scheduler.

3. Nascom: Com Mgr.

c. Procedure

1. STARLinkOCC may terminate an ongoing event by transmitting a Specific Schedule Request (delete) (99.11) to the NCC.

2. The NCC receives, acknowledges, and processes the request, transmits a Schedule Result Message (99.02) and Delete Notification (99.01) to STARLinkOCC, and generates and transmits a cancel SHO request (OPM-12) to WSC and a Schedule Update Message to Nascom.

3. Service termination for an ongoing event is verified by termination of DQMs in the NCC, user performance data, and spacecraft data in the STARLinkOCC.

5.2.3.7 STARLinkOCC/NCC/TOCC Coordination

a. Purpose. This procedure defines the method of coordination of user service-related problems when the NCC determines that direct WSC/TOCC assistance to the user may be needed to resolve problems that occur during the ongoing support period.

b. Participants

1. NCC:

(a) Network Manager (NM).

(b) Performance Analyst (PA).

(c) TNC.

(d) Technical Manager (TM).

2. STARLinkOCC.

3. TOCC:

(a) STGT OPS.

(b) Communications Services Controller (CSC).

c. Procedure

1. Even though the customer, the NCC, and the TOCC are all on the same full-period voice circuit, the customer interface with the Network is through the TNC or PA at the NCC. However, direct voice communications between customer personnel and TOCC controllers may be advantageous under certain circumstances as determined by the NCC.

2. If direct communication with the TOCC personnel is desired by the customer, the customer will make a request to the TNC or PA. The NCC will authorize direct communications between the customer and the TOCC if deemed appropriate.

3. The NCC retains responsibility at all times for coordination and approval of all resolution activities discussed and/or deemed appropriate for the support problem being observed/resolved.

5.2.3.8 SN Fault Isolation

a. Purpose. This procedure establishes the guidelines for resolving problems which may occur during an event's support. Detailed procedures are contained in the *Network Control Center/Space Network Real-time Fault Isolation Procedures*, STDN No. 502.8.

b. Participants

1. NCC:

(a) NM.

(b) TNC.

(c) PA.

(d) TM.

2. STARLinkOCC.

c. Procedure. The TNC/PA is responsible for identifying problems and coordinating fault isolation. The following guidelines are used:

1. The user may not troubleshoot a problem after it has been established as an SN anomaly unless requested by the NCC to assist in problem resolution. If the user is not willing to accept limited/degraded support, it will release the service to the NCC for problem resolution.

2. The NCC has the capability at all times to configure or reconfigure the network; however, changes to the SN configuration are not made during mission support without notifying the user.

3. Users will be advised only that service will be available/unavailable for the period in question. They will not be informed of any specific equipment/system failure.

5.2.3.9 Briefing Message

a. Purpose. This procedure provides methods by which the NCC and test elements will be notified of test support requirements and may include deviations from established test procedures. (Reference: *Space Tracking and Data Network Tests and Simulations Handbook*, 530-NOP-STDN/TS, Section 5.27.)

b. Participants

1. NCC: NM, Network Test Manager (NTM), Network Operations Manager (NOM), and/or Test Director (TD).

2. STARLinkOCC: Designated STARLink Test Conductor.

3. Other supporting entities.

c. Procedure

1. Operational instructions to be followed by the SN in connection with a scheduled test or simulation must be documented in the form of a Briefing Message (BM). A BM is prepared by the mission NOM for all network tests and simulations.

2. Prior to a scheduled test or simulation, the BM is submitted to the NTM for review. Upon approval, the BM is then submitted to the NCC for review and transmission to the Network. BMs are required to be transmitted to the supporting entities at least 3 working days prior to the scheduled test or simulation. If a BM is not received in sufficient time, as determined by the NM or TM, the test or simulation is cancelled and rescheduled. Only under extenuating circumstances will the 3-day requirement be waived.

3. BMs are limited to information or definitions concerning the particular test or simulation. BMs are not used to update or change documentation and are not used to schedule station resources.

4. All questions concerning the BMs are directed by the NCC to the originator of the message.

5. Requirements for a test results report are included in the BM.

6. The BM should contain the applicable parts of the following message format:

(a) General:

(1) Test title (identical to that on calendar schedule).

(2) Date of test or simulation.

(3) Start, stop, and (if applicable) T minus 0 times.

(4) Support Identification (SUPIDEN)/Vehicle Identification Code (VIC).

(b) Participants:

(1) STDN.

(2) GSFC.

(3) Other agencies or Centers.

(c) Test Objectives:

(d) Data Source:

(1) Launch Vehicle/Spacecraft (SC). Include confidence tape number, station type of data, track number, cue time, and remarks. Also include the use of any special equipment required.

(2) Other Sources: Station Data Generator (DG), Portable Spacecraft Simulator (PSS), etc.

(e) Test Description:

(1) Equipment configuration to be established.

(2) Testing requirements (success criteria).

(3) Sequence of events (script or procedures to be followed; i.e., time, station position, and event columns, including sequence numbers).

(4) Configuration codes/special SHO requirements (TDRSS only).

(5) Test timeline and procedures.

(f) Communication Line Requirements: Voice/Data.

(g) Reference Documentation:

(1) Pertinent mission planning documents.

(2) Element requirements documents.

(3) Other.

(h) Tracking Requirements.

(i) General Remarks.

(j) Reporting:

(1) Debriefing requirements.

(2) Data disposition.

(3) Test results reports.

(k) Points of Contact:

(1) Teletype address

(2) Phone number.

7. Upon completion of NCC review of the BM, the NM authorizes the BM transmission to the elements supporting the event.

5.2.4 Voice Callsigns

Callsigns normally used during STARLinkOCC/NCC interface activities are as follows:

	Term	Callsign
a.	NCC	TNC East/TNC West/TNC Spare
b.	STARLinkOCC	STARLink Control
c.	NCC Acquisition Tracking	ACQ TRK
d.	NCC Performance Analyst	PA East/PA West/PA Spare
e.	NCC Technical Manager	NCC TM
f.	NCC Scheduler	NCC Scheduler

5.3 NCC Data Base Information

5.3.1 Configuration Codes

A configuration code is a set of fixed and reconfigurable parameters which define a single service for a given SN user. STARLink configuration codes are contained in Tables 5-1 through 5-3. Configuration codes must be resident in the NCC and STARLinkOCC data bases prior to the start of interface testing. The STARLink MOSP is the controlling document for STARLink configuration codes. Any changes to these codes must be made in accordance with paragraph 5.3.2.

5.3.2 Configuration Code Change Procedure

5.3.2.1 Purpose

When the STARLink project determines a need to either change an existing configuration code or add a new configuration code to the existing codes, the procedure, as documented in Section 5 of the *Network Control Center Users Data Base Management and Control Plan*, STDN No. 910 and the *NCC Data Base Configuration Procedure*, STDN No. 910.1 will apply.

5.3.2.2 Participants

a. STARLinkOCC.

b. STARLink MSM.

c. NCC Data Base Manager (DBM).

d. NM.

Table 5-1. KSA Return Link Configuration Codes

Return Configuration Code	DG	Data Rate (Mb/sec)				Data Stream ID		Data Type	
		Initial		Maximum					
		I	Q	I	Q	I	Q	I	Q
P01	2	137.088	137.088	137.088	137.088	105	106	1	1
P02	2	137.088	137.088	147.456	147.456	105	106	1	1

Table 5-2. Forward Link Configuration Codes

Forward Configuration Code	TDRSS Service	Data Rate (b/sec)		Power Mode
		Initial	Maximum	
N01	KSAF	56000	56000	Normal

Table 5-3. End-to-End (Simulation) Configuration Codes

Code ID	TDRSS Service	Service Type	Simulated STARLink Function
S01	KSAF	Forward	Command
S02	KSAR	Return	Telemetry

5.3.2.3 Procedure

The STARLink project will submit a Data Base Change Request (DBCR) to the STARLink MSM, who will in turn, verify that the request meets approved SN support commitments. The MSM will complete and forward the DBCR to the SN DBM. The DBCR will conform to the following format and contain, at a minimum, the following information:

From: MSM (or user POCC)
To: SN DBM
Info: POCC
ATSC Network Evaluation Unit (EDU)/GCP
NCC NM

1. Subject: NCC Data Base Change Request
2. SIC: (Four numeric character SC identifier; refer to document No. 534-808)
3. Type Change: (Routine/Non-routine, Permanent/Temporary)
4. Data Base Subset to be Changed: (Configuration Code, Spacecraft Characteristic Record, Nascom Scheduling Parameters, etc).
5. Configuration Code or Prototype Event ID with SUPIDEN:
6. Parameters to be Changed in NCC:
   a. Parameter name:
   b. Channel: (I, Q, 1, 2, 3)
   c. Parameter value: from _____, to _____.
      (Note: repeat a, b, and c for each parameter to be changed.)
7. Requested Implementation Date: (YR,MO,DA time Z)
8. Additional Clarifying Remarks:
9. Release Authority:

NOTE

Insert NA in items that do not apply

5.3.2.4 Data Base Change Instruction

Upon receipt of a DBCR, the SN DBM will determine if other SN elements are affected by the change. If applicable, the SN DBM will issue a Data Base Change Instruction (DBCI) to the affected elements.

5.3.2.5 Verification and Acknowledgement

a. When an SN element receives a DBCI from the SN DBM, the affected element Data Base Coordinator (DBC) will initiate local processing procedures to validate and implement the change.

b. Upon completion of implementation processing, the affected element will send a verification and acknowledgement message to the SN DBM. Initial acknowledgement may be sent verbally for real-time data base changes; however, written documentation must follow.

5.3.2.6 Data Base Change Notice

When the SN DBM has received acknowledgement of implementation and validation of data base changes from all affected elements, the SN DBM will transmit a Data Base Change Notice (DBCN) to the affected SN users (MSM) indicating to all addressees that a requested data base change has been implemented.

5.4 Fault Isolation and Monitoring Procedures

5.4.1 General

Fault isolation provides a rapid and effective method of determining the source of the real-time network element needed to initiate and complete isolation procedures to correct the fault.

5.4.2 NCC Operations Management

The NCC is the central control point for all TDRSS operational management. The NCC provides the real-time support interface between TDRSS and the user. This responsibility involves all operations control functions, emergency scheduling, network status monitoring, fault isolation, and testing of the network.

5.4.3 Guidelines

5.4.3.1

The NCC coordinates all operational real-time fault isolation when a SN problem is identified or suspected. Real time is defined as that period 5 minutes prior to scheduled event start time (T-5) to event termination (T+N).

5.4.3.2

The SN element discovering or becoming aware of a real-time operational problem, should notify the TNC.

5.4.4 Methodology

5.4.4.1

Status and control messages exchanged between the user elements include:

a. Communications Test Blocks (CTB).

b. OPM.

c. DQM.

d. UPD.

5.4.4.2

A step-type overview of procedures used for fault isolation can be found in STDN No. 502.8.

Section 6. NASA Ground Terminal Operations

There will be no NASA Ground Terminal (NGT) support required for the STARLink Mission.

Section 7. White Sands Ground Terminal

There will be no White Sands Ground Terminal (WSGT) support required for the STARLink mission.

Section 8. White Sands Complex

8.1 General

8.1.1

The WSC is a new ground terminal located in White Sands, New Mexico. The WSC will provide communications support through the TDRSs to vehicles placed in or below low Earth orbit. All TDRSS user services provided by the WSC will be scheduled through the NCC located at GSFC.

8.1.2

The ground station has the capability of constant communications with each of the orbiting TDRSs as well as a full complement of simulation and verification equipment for all users. WSC will provide the forward link (commands) and return link (telemetry) services for the STARLink spacecraft. Refer to *Space Network (SN) Users Guide*, STDN No. 101.2, Revision 6; "Performance Specification for Services via the TDRS"; and *Requirements Specification for STGT*, Document STGT-P-01, for information pertaining to the operational aspects of TDRSS use.

8.2 Detailed Support Definition

8.2.1 TDRSS Service Use

8.2.1.1

STARLink uses the TDRSS KSA services to support the command, telemetry, and payload data transfers.

8.2.1.2

End-to-end (ETE) Services (simulation) are provided to support prelaunch and orbital testing with TDRSS and STARLink. Paragraphs 8.2.2.1 through 8.2.2.4 define TDRSS service use in relation to spacecraft operations functions. Configuration codes supporting service use are contained in Section 5 of this MOSP.

8.2.2 KSA/Tracking/ETE Services

8.2.2.1 General

KSA services will be scheduled to support the STARLink telemetry requirements.

8.2.2.2 KSA Forward Link 13.775 GHz

Command Channel	Ranging Channel	Power Ratio	Data Rate	Command Format	PN Code	Support Remarks
Command			400 kb/sec	NRZ-L	N/A	Normal Command Support

8.2.2.3 KSA Return Link 15.0034 GHz (I/Q Channel Power Ratio 1:1)

TDRSS Service	I Channel	Q Channel	Modulation	Support Remarks
DG 2	147.456 Mb/sec TLM	147.456 Mb/sec TLM	S-QPSK	Continuous support

8.2.2.4 Tracking Services

No tracking services are required for the STARLink missions.

8.2.2.5 End-to-End Services

ETE services are used to support testing for each operational function. Refer to Section 5 for applicable configuration codes.

Section 9. Ground Network

There will be no GN support required for the STARLink flights.

Section 10. Special Support

There is no special support for the STARLink missions.

Section 11. Nascom Operations

11.1 General

This section provides the procedures and configuration information required for Nascom support of the STARLink SN interfaces. When general procedures are applicable, they are referenced by document. Where specific procedures are required, they are contained within this section.

11.2 Nascom Resources

11.2.1 General

Nascom resources supporting STARLink/TDRSS interfaces consist of voice, FAX, and data interfaces. (See Figure 11-1.) Type-2 data between the WSC and the STARLink is transported via the Nascom Stat Mux system. The Stat Mux system is configured as scheduled by the NCC.

11.2.2 Type-2 Data Interfaces

11.2.2.1

Nascom is responsible for assigning source/destination channel ID codes for NCC scheduling. The associated circuit designations assigned are for circuit interconnecting and troubleshooting coordination with Tech Control.

11.2.2.2

Nascom Stat Mux options are selected configuring the Stat Mux according to the user's request for the desired options.

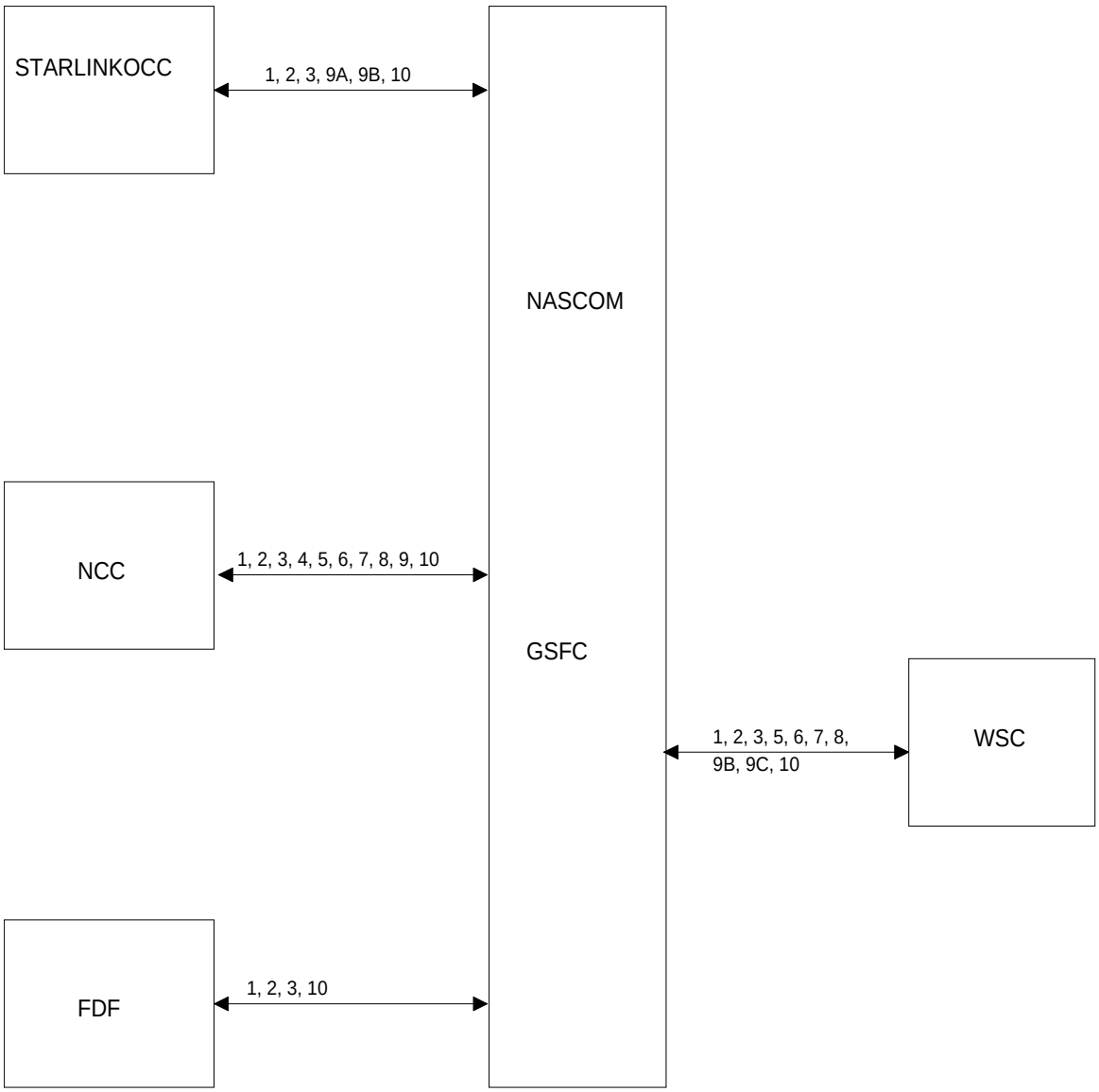

Figure 11-1. Nascom Interfaces for STARLink TDRSS Support (1 of 2)

Legend

1. Test Coordination Conference. Provided when NCC conducts simulations of STARLink test cases.

2. Mission Operations Conference. For conducting normal mission operations.

3. Computer Coordination. For coordination relating to state vectors, force models, etc.

4. NCC/Nascom Coordination (Closed Circuit Loop [CCL]-1). For general operations coordination, troubleshooting, and verbal relay from NCC of reconfiguration requests.

5. TDRSS-1. Operations coordination loop between NCC and TDRSS Ops (used in item 3 configuration).

6. TDRSS-2. Troubleshooting coordination between NCC and TDRSS Ops.

7. TDRSS-3. Scheduling coordination between NCC and TDRSS Ops.

8. TDRSS-4. Test/simulation coordination between NCC and TDRSS Ops (used in item 2 configuration).

9. Data Interfaces:

   9A - Spacecraft command/telemetry.
   9B - POCC/NCC scheduling (TSCS).
   9C - NCC/WSC status/scheduling.

10. Type-8 vector interface (from STARLinkOCC).

Figure 11-1. Nascom Interfaces for STARLink for TDRSS Supported (2 of 2)

11.3 Resource Scheduling Procedures

11.3.1 General

Voice circuits are provided on a full-period basis and are available for activation/use procedurally without a specific scheduling input to Nascom. Conversely, all Type-2 Nascom data services provided will be provided as scheduled through the NCC.

11.3.2 Scheduling by NCC for Real-Time Type-2 Data Interfaces

11.3.2.1

The NCC sends scheduling and reconfiguration messages to WSC for events which involve data flows.

11.3.2.2

In the event of a NCC/POCC scheduling/status line failure, the NCC will update schedules to the WSC based upon verbal direction from the POCC.

11.4 Operations and Coordination Procedures

11.4.1 General

Basic operations and coordination procedures for Nascom/NCC and Nascom/WSC operations functions are contained in *Interface Control Document between the Network Control Center Data System and the Nascom Control and Status System*, Revision 1, 530-ICD-NCCDS/Nascom.

11.4.2 Type-2 Data Events

11.4.2.1

Before the start of the series of events, or at a time specified, the NCC Ops/Test Conductor will call GSFC Voice Control to establish the voice circuits and conferences. These circuits/ conferences remain configured for the duration of the activity unless otherwise directed by NCC. GSFC Voice Control notifies NCC Ops/Test Conductor when the configurations are complete.

11.4.2.2

Stat Mux operating personnel, using the advanced schedule, will locally configure the Stat Mux.

11.4.3 Fault Isolation/Circuit Restoration Procedures

11.4.3.1
Fault isolation functions are coordinated by NCC in accordance with procedures contained in STDN No. 502.8.

11.4.3.2
STARLink elements normally report outages to the TNC, who relays the report to the Com Mgr. The TNC normally uses CCL-1 for this purpose.

11.4.3.3
If no loop is available for such reporting in the event of an outage on a supporting circuit, the discovering party reports the outage to the Com Mgr on (301) 286-6141.

11.4.3.4
GSFC Tech Control coordinates with WSC (Stat Mux Coordinator) and with STARLink Ops (STARLink Control) as necessary, to verify channel integrity. If the channel problem is not within Nascom support facilities, the Com Mgr advises the TNC and awaits further coordination requests. If the problem is within Nascom facilities, GSFC Tech Control immediately initiates corrective action, and when accomplished, advises the Com Mgr.

11.4.3.5
The Com Mgr relays this report to the TNC and advises of the nature of the corrective action taken.

Section 12. Flight Dynamics Facility

12.1 General

This section provides the procedures and information pertaining to the GSFC's FDF operations for STARLink mission support. The NCC will receive Type-8 vectors in accordance with established formats from the STARLinkOCC for transfer to the WSC.

12.2 Acquisition Data

The NCC will transmit TDRS IIRVs to the ARC POCC in accordance with established formats. In the event the TDRS IIRVs routinely transmitted by FDF to the NCC are not sufficient to meet the needs of the POCC, NCC will request transmission of the necessary TDRS IIRV from FDF via electronic mail (E-Mail). The NCC will nominally allow FDF 3 working days to meet such a request.

12.3 Electronic Mail Addresses

The following personnel and E-Mail addresses have been designated FDF points of contact for the generation of TDRS IIRVs:

a. Greg Marr
E-Mail Address: GREG.MARR@GSFC.NASA.GOV

b. Frank Vaughn
E-Mail Address: FRANK.VAUGHN@GSFC.NASA.GOV

c. Tim Thompson
E-Mail Address: TIM.THOMPSON@GSFC.NASA.GOV

d. Lori Baxter
E-Mail Address: LORI.BAXTER@GSFC.NASA.GOV

e. John Grunder
E-Mail Address: JOHN.GRUNDER@GSFC.NASA.GOV

f. FDF
E-Mail Address: FDFADO@AMS.GSFC.NASA.GOV

Section 13. Sensor Data Processing Facility

There will be no Sensor Data Processing Facility (SDPF) support required for the STARLink mission.

Section 14. Testing

14.1 Testing and Simulations

14.1.1 General

This section reflects the preliminary planning for data flows and simulations.

14.1.2 Scheduling

No attempt will be made to update this section with respect to changes in scheduling time and dates. The Network Operations Forecast and general scheduling messages specify scheduling times and dates, and the briefing messages provide support details.

14.1.3 Briefing Messages

Briefing messages are generated by the Test Planner and provide all test participants with detailed support requirements. Briefing messages are not transmitted until the Test Planner receives a schedule confirmation from Code 534.2.

14.2 Testing and Verification Responsibility

The testing and verification functions for the STARLink flights are conducted by various entities. The station personnel are responsible for performing station engineering tests. The STARLink ground system testing is the responsibility of the Simulations and Compatibility Test Branch, Code 515; the Systems Test Section, Code 531.4; and the Network Technical Operations Manager (NTOM), Code 534.1.

14.3 Tests and Simulation Types

The following types of tests and simulations are conducted to verify MO&DSD system capability and readiness to support the STARLink mission.

a. Station engineering testing.

b. Verification testing.

c. Operational readiness testing.

14.4 Engineering Testing

14.4.1 Objectives

The engineering test objectives are to ensure that the SN equipment and/or software are station-capable of supporting the STARLink flights. These tests will also familiarize personnel with STARLink support requirements and provide crew training.

14.4.2 Test Description

Engineering tests will initially be performed on the unit, subsystem, or system level and repeated when there is a change in site or STARLink hardware or software used for mission support. The tests will verify that equipment and/or software meet all function and performance specifications. These tests will be limited to new equipment, or software requirements.

14.5 Verification Testing

Verification tests are conducted using a simulated data source to verify the interfaces between the SN and STARLink ground support elements. These tests also verify the mission-unique software and hardware used by each element. Scheduling and test support details are provided by test briefing messages. At least one satisfactory data flow is required between each supporting element prior to operational testing.

14.6 Operational Readiness Testing

14.6.1 Test Objective

Operational readiness test objectives will verify the operational readiness of stations, networks, and all supporting elements of the STARLink missions. These tests also provide personnel training and familiarization with the operational scenarios prior to the STARLink launch, to support STARLink telemetry and command requirements via the TDRSS.

14.6.2 Test Description

Operational readiness testing is the final testing performed with elements of the entire network. The tests are simulations, run with a test script or timeline, provided by a briefing message. Code 531.4 is responsible for the overall implementation of the Network Test Program, Code 510, for mission readiness testing, and to Code 534 for the operational readiness of the network.

14.7 Test Participants

14.7.1 On-site GSFC Participants

a. Nascom Com Mgr.

b. Nascom Technical Control personnel.

c. Nascom Voice Control personnel.

d. NCC Test Director.

e. NCC Network Operations personnel.

14.7.2 Off-site Participants

a. WSC Operations personnel.

b. ARC/STARLinkOCC Operations personnel.

14.8 Test Scheduling

14.8.1

The Systems Test Section, Code 531.4, is the GSFC organization responsible for coordinating all SN tests and simulations. In this capacity, GSFC Code 531.4 establishes procedures which outline the steps necessary to ensure that services and resources are properly scheduled to satisfy test and simulation requirements within Network capabilities (refer to the 530-NOP-STDN/TS).

14.8.2

Final scheduling responsibilities of STDN resources rest with Code 534.2.

14.9 Test Criteria

14.9.1 Verification/Validation/Quality Check

Detailed objectives and criteria for a successful test will be contained in the briefing message for each test.

14.9.2 Reports

14.9.2.1 Trouble Tracking Report (TTR)

The TTR system provides a controlled method of identifying, reporting, analyzing, and correcting problems/failures in the SN. The system ensures that every reported problem/failure is documented and a problem/failure resolution is reported. TTRs are completed by any network entity experiencing a problem, and are controlled by the NCC. The TTR system provides data which may be used for trend analysis of the SN system.

14.9.2.2 Test Director Test Result Reports (TRR)

TRRs are submitted by the Test Director to the NTM and NCC NM/TM immediately after conclusion of the test activities. The TD report includes:

a. Test title and support identification.

b. Date and time of test (UTC).

c. Purpose of test.

d. Test results.

e. Problems.

f. Data disposition (if applicable).

14.9.2.3 Daily Reports

The test organization transmits to various organizations, via telemail, a daily test report containing detailed information of all test activities conducted the previous day; i.e., follow-up action on past problems, identification of new problems, a schedule of near future test activities, and a daily summary test report.

14.9.2.4 Weekly Test Report

The test organization submits a weekly test report to Code 530 outlining all significant events supported the previous week, and an overall status report of planned test activities.

14.9.2.5 Test Data Packages

Major test efforts require the compilation of large amounts of data and extensive analysis. Test data packages associated with this type of effort are received, reviewed, analyzed, and approved by members of the test organization.

14.9.2.6 Anomaly/Discrepancy Follow-up

Upon completion of data analysis (delogs, test reports, etc.), the Code 513 Mission Readiness Manager (MRM) verifies that a TTR exists, and depending on the magnitude of the problem, conducts meetings with the appropriate organization and submits reports describing the anomaly and recommended corrective action, as applicable.

Section 15. Data Management

15.1 General

This section provides information pertaining to data distribution within the SN, and between the SN and STARLinkOCC. The information addresses SN data products.

15.2 Data Disposition Instructions

Standard procedures for management and disposition of all recorded data are contained in *STDN Network Operations Procedures for Data Management*, STDN No. 502.11. Mission-specific data disposition instructions are contained in this section. Instructions contained in the following paragraphs are segregated by SN element for operations-related items, and by category of activity for data items generated during test 00 fault isolation activities.

a. NCC. Data disposition instructions for NCC records are contained in Table 15-1.

b. Nascom. Data disposition instructions for Nascom are provided in Table 15-2.

c. FDF. All FDF products are handled in acceptance with standard procedures contained in the *Operations Interface Procedures (OIP) Between the GSFC NCC and the FDF*, STDN No. 508.35.

Table 15-1. NCC Data Requirements and Disposition

DSS No.	Data Label	Data Description	Data Disposition
111	2090 (Note)	UNISYS 1100 console printouts	Hold 30 days, then destroy.
112	2090	VAX 8530 terminal	Hold 30 days, then destroy.
131	2096 (Note)	UNISYS 1100/82 dynamic dump tape	Hold 30 days, then reuse.
132	2096 (Note)	VAX log tapes or destroy.	Hold 30 days, then reuse.
NOTE Used for onsite control at station option; data labels are required for all data shipped off-site.			

Table 15-2. Nascom Data Disposition Instructions

DSS No.	Data Label	Data Description	Data Disposition
113	2090	PDP 11/23 hardcopy	Unless otherwise directed, hold 30 days, then destroy.

Section 16. STDN Interface Teletype Headers

16.1 General

The Nascom Division, Code 540, is in the process of replacing the current Teletype (TTY) system. All administrative messages regarding Nascom operations will be handled on the Administrative Message System (AMS). In addition, the Nascom Message Center (routing indicator GSTS) will no longer serve as the distribution point for GSFC TTY messages. All telex traffic will by the Crypto Center (routing indicator GFAL). Users may experience delays with sending telex traffic. Those individuals who are currently using the GSFC Message Center as a TTY distribution point will maintain the ability to send and receive messages by using electronic mail or facsimile machines.

16.2 Administrative Message System

The AMS is an electronic mail system capable of performing internet mail exchange and sending facsimile messages. All existing circuit designators currently used for sending administrative messages via the TTY system will be converted to the AMS.

16.3 Sending Messages on the AMS

From any electronic mail system that has an SMTPMail gateway, messages can be addressed to Nascom routing indicators by NASA@AMS.GSFC.NASA.GOV.

Example:

If you previously sent a form GSFC 11-11 to the Nascom Message Center addressed to JJPL, you simply send an electronic mail message to JJPL@AMS.GSFC.NASA.GOV. All previous message formats for info and action lines remain the same.

TO: JJPL@AMP.GSFC.NASA.GOV

SUBJECT: Test Message

ACTION: HMSC / N SKY CODE FS10 / 0 DAY CODE FS11

INFO: HMSC / B FROST CODE FS15 / C CLOUD FS3 / E HAZEL CODE FS4 GCEN / W COAST CODE 501 / R JASON CODE 530

This is an example of a message using the ACTION and INFO format when sending messages to users on the AMS.

16.4 Receiving Messages for the AMS

A person can receive messages from other NASA Message Centers and personnel via electronic mail. The GSFC Message Center will no longer serve as the distribution point for any on-Center mail delivery or copying. To make it easier on personnel wanting to send electronic mail to you, it is suggested that each person utilize the GSFC Electronic Mail Reflector System (ERS). This system allows each person at GSFC with an electronic mail address to be addressed by their FIRSTNAME.LASTNAME@GSFC.NASA.GOV without the end-user having to know which electronic mail system the user resides on. It is important that the ERS contain the correct mailing address in which you wish to receive your mail. To have this verified, contact the Center Networking Environment at (301) 286-7342. If you do not have an electronic mail address, you can receive messages via facsimile. Inform the person sending to you of your fax number. For additional information, contact the AMS support staff at (301) 286-4700.

Section 17. Television Support

There is no Television support required for the STARLink mission.

Appendix. List of References

The List of References is not intended to provide a complete list of applicable documents that cover all MO&DSD ground system interfaces and their standard procedures for the utilization of those interfaces. Where standard interface procedures are not available, those procedures will be contained in the applicable sections of this document until such time as the standard interface procedures become available. True mission-unique interface procedures will be contained in the applicable sections of this document.

a. *Space Network Operations Policy*, STDN No. 119.

b. *STDN Network Operations Procedures for Data Management*, STDN No. 502.11.

c. *Network Operations Control Center and Station Interface Procedures*, STDN No. 502.16.

d. *NCC Data Base Configuration Control Procedure*, STDN No. 910.1.

e. *NASA Communications Operating Procedures (NASCOP)*, STDN No. 540, Volume II.

f. *Space Network (SN) Users Guide*, STDN 101.2, Revision 6.

g. *Tracking and Data Relay Satellite System (TDRSS) Functional Description*, STDN No. 117.

h. *Interface Control Document between the Network Control Center Data System and the Nascom Control and Status System*, 530-ICD-NCCDS/Nascom.

i. *Data Format Control Document (DFCD) between the Goddard Space Flight Center (GSFC) Payload Operations Control Center (POCC) and the NCCDS*, 530-DFCD-NCCDS/POCC.

j. *STDN Tests and Simulations Handbook*, 530-NOP-STDN/TS.

k. *Network Control Center/Space Network Real-Time Fault Isolation Procedures*, STDN No. 502.8.

l. *Operations Interface Procedures Between the GSFC NCC and Nascom Operations during the IOC era*, STDN 508.32.

m. *Standard Operations Interface Procedures between the Network Control Center (NCC) and the Spaceflight Tracking and Data Network Users*, STDN No. 509.

n. *Tracking and Data Acquisition Handbook for the Spaceflight Tracking and Data Network*, STDN No. 724.

o. *Telemetry Software Catalog (TESOC) for the Network*, STDN No. 515.5.

p. *NCC Users Database Management and Control Plan*, STDN No. 910.

q. *Nascom Communications Division CCS Users Guide*, 514-019.

Abbreviations and Acronyms

AOS	acquisition of signal
AMA	Airborne Modem Assembly
AMS	Administrative Message System
ARC	Ames Research Center
ATSC	AlliedSignal Technical Services Corporation
BM	briefing message
B/U	backup
C&DH	command and data handling
CCL	closed circuit loop
CCTV	closed-circuit television
CMD	command
CMF	Command Management Facility
CMS	Command Management System
CSC	Communications Services Controller
CTB	communications test blocks
CTV	compatibility test van
DBC	Data Base Coordinator
DBCI	data base change instruction
DBCN	data base change notice
DBCR	data base change request

DBM	Data Base Manager
DCF	Data Capture Facility
DCN	documentation change notice
DG	data generator
DG2	data group 2
DOCS	Data Operations Control System
DQM	data quality monitor
DR	discrepancy reports
DSN	Deep Space Network
EC	engineering change
EDU	ATSC Network Evaluation Unit
E-Mail	electronic mail
FDF	Flight Dynamics Facility
FEC	forward error correction
FEMA	Federal Emergency Management Agency
FIMS	Fault Isolation and Monitoring System
FOA	flight operations analysts
GCF	Ground Communications Facility
GCM	ground control message
GCMR	ground control message request
GMT	Greenwich Mean Time
GN	Ground Network

GPS	Global Positioning System
GSFC	Goddard Space Flight Center
HDR	high data rate
HGA	high-gain antenna; high gain antenna assembly
HPA	high voltage power amplifier
HRBS	high rate bit sync
HVPS	high voltage power supply
Hz	Hertz
IIRV	improved interrange vector
IR	Infra-Red
I&T	integration and test
ISI	interim support instruction
kb	kilobit
kHz	kilohertz
Km	kilometer
KSA	K-band single access
KSAF	KSA forward
KSAR	KSA return
LCR	Launch Control Room
LOS	loss of signal, line-of-sight
MA	multiple access
MAS	Modis Airborne Simulator
MDM	Multiplexer/Demultiplexer

MO&DSD	Mission Operations and Data Systems Directorate
MOD	Mission Operations Directive
MODNET	MO&DSD Operations Development Network
MOP	Mission Operations Plan
MOSP	Mission Operations Support Plan
MPT	Mission Planning Terminal
MRM	Mission Readiness Manager
MSM	Mission Support Manager
MSS	Message Switching System
NA	not applicable
NASA	National Aeronautics and Space Administration
Nascom	NASA Communications Network
ND	Network Director
NCC	Network Control Center
NGT	NASA Ground Terminal
NM	Network Manager
NOM	Network Operations Manager
NRZ-L	nonreturn to zero-level
NTM	Network Test Manager
NTOM	Networks Technical and Operations Manager
NUTI	Nascom User Traffic Interface
ODM	operations data message
OIP	operations interface procedures

OPM	operations message
Ops	operations
OPSR	Operations Supervisor
PA	Performance Analyst
PCM	pulse code modulation
PI	Primary Investigator
POCC	Payload Operations Control Center
PSS	portable spacecraft simulator
RAMS	Radiation Measurement System
RF	radio frequency
RFA	RF assembly
RFSOC	RF Simulations Operation Center
RIC	request for information or clarification
RS	Reed-Solomon
R/T	real time
SAR	schedule add request
SASS	STARLink Airborne Sub-System
SC	spacecraft
SCAMA	scheduling, conferencing, and monitoring arrangement
SDPF	Sensor Data Processing Facility
SHO	scheduling order data message
SIC	support identification code
SN	Space Network

SOC	Simulations Operation Center
SPIF	Shuttle/POCC Interface Facility
SQPSK	staggered quadriphase shift keying
SRM	Schedule Request Message
SSA	S-band single access
SSI	Software Support Instruction
STARLink	Satellite Telemetry and Return Link
STARLinkOCC	STARLink Operations Control Center
Stat Mux	statistical multiplexer
STDN	Spaceflight Tracking and Data Network
STGT	Second TDRSS Ground Terminal
SUPIDEN	support identification
TBD	to be determined
TBS	to be supplied
TD	Test Director
TDRS	Tracking and Data Relay Satellite
TDRSS	Tracking and Data Relay Satellite System
TGU	Telemetry Generation Unit
TLM	telemetry
TM	Technical Manager
TNC	TDRSS Network Controller
TOCC	TDRSS Operations Control Center
TP	Test Planner

TRR	test result reports
TSCS	TDRS Scheduling and Control System
TTR	Trouble Tracking Report
TTY	teletype
UPD	user performance data
UTC	universal time code, universal time coordinated
UUE	user unique equipment
VIC	vehicle identification code
WSC	White Sands Complex
WSGT	White Sands Ground Terminal

Distribution List

Organization	Name of Recipient	Copies
GSFC/501	AMBROSE, MARK E.	3
GSFC/501	CARLS, J. GAY	1
GSFC/531.4	GARZA, PAULINO	1
GSFC/532.2	SOBCHAK, TED C.	1
GSFC/534	FLAHERTY, ROGER J.	1
GSFC/534.1	BLANEY, GREGORY D.	2
GSFC/542.1	LAWLESS, EDWARD A.	1
GSFC/542.1	ZGONZ, JERRY	1
ATSC LIB/NTIP	ATSC/GCP/530 LIBRARY	4
ATSC/ND/MOST/MMU	GOLDEN, JAMES A.	1
ATSC/NOG	BURLEY, JEANNIE	1
ATSC/OTU	CHAMBERS, KENNETH E.	1
ATSC/PAP	GATES, DONALD W.	10
NARC	ROBERTS, ANDREW	2
NARC	TRAN, GIA	2
GTE/WSGT	WSGT TECHNICAL LIBRARY	1
	DISTRIBUTION	33
	STORAGE	7
	TOTAL	40

To coordinate changes to this distribution list, contact the ATSC/GCP/530 Library via mail GSFC c/o Code 534.4/OSU, via phone 301-805-3897, or AMS/GCEN/NTIP/OSU. This distribution list is current as of 8/30/95.

Mission Operations Support Plan for the STARLink Project