FA-1.0 Rev. 1
NCC98
07/13/97

Title: Baseline Forecast Scheduling Operations Scenario

Objectives:

- Verify System Logon
- Verify receipt and validation of schedule requests
    - Schedule Add Requests
    - Schedule Delete Requests
- Verify Operator Actions and Local Schedule Maintenance Activities to include:
    - Review SARs
    - Adding SARs
    - Deleting SARs
    - Scheduling S0200PM's based on OPM-54 requests. (if applicable)
    - Use of Prototype Events (PE's) and Service Specification Codes (SSC's)
- Verify schedule transmissions (SRMs and USMs)
    - To POCC's
- Verify Alert Response and Alert Periods
- Verify generation of TDRS Resource Availability
- Verify creation of an effective Forecast schedule
- Verify activation of the Forecast schedule.
- Execute delog reports using the NCCDS Central Delogger (NCD)
- Characterize effectiveness, usability, and timeliness of new SPSR tools.
- Train FA and fill out skills catalogs and Training Event Reports (TERs)
- Document Verification

Configuration:
System will be configured in the shadow mode for the entire test to allow receipt of external messages (99/10s & 99/11s from the POCCs) throughout the run. All operator actions resulting in system output will be directed to NTS. Scheduling will be done in both the Batch, and Automatic Modes.
The equipment strings to be utilized while in the shadow mode will include on the Operations side SPS, CCS, NFE, and RAP. The Test equipment will include NTS, LISTNER, FIREWALL (connected to the WWW), NPG,NSM, CCS, SAS, SPSR, NSM Workstation, and Operator Workstations. (See figure next page.)

Prerequisites:
- Test/Operations passwords configured
- NSIA will configure system in shadow mode.
- Operator will review the SPSR User's Guide.

Data Source:
Data will originate from operations and NTS.

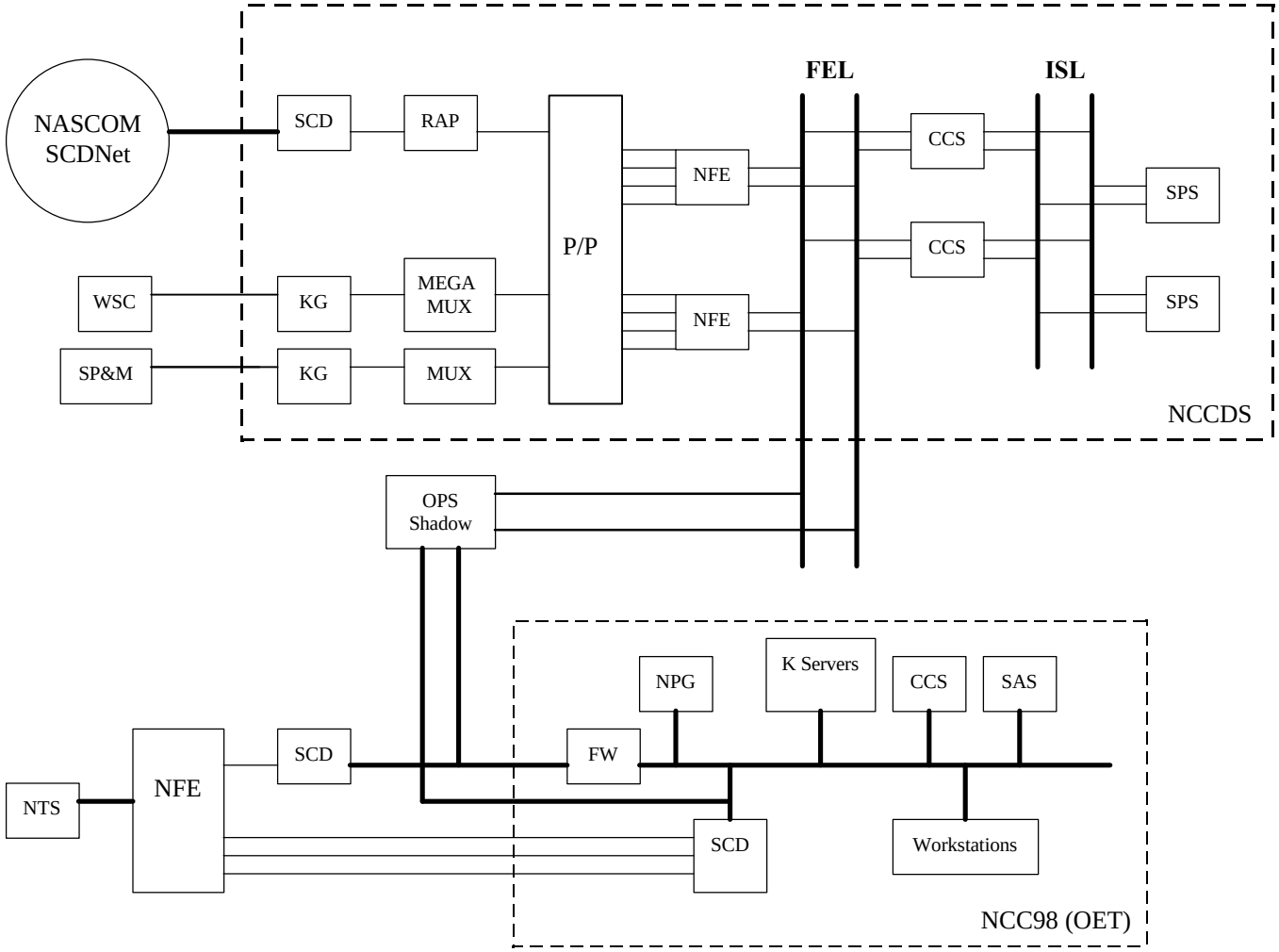
NASCOM
SCDNet
SCD
RAP
P/P
NFE
NFE
FEL
ISL
CCS
CCS
SPS
SPS
WSC
KG
MEGA
MUX
SP&M
KG
MUX
NCCDS
OPS
Shadow
NPG
K Servers
CCS
SAS
FW
SCD
NTS
NFE
SCD
Workstations
NCC98 (OET)

Ops Scenario: (Italicized steps are performed by NSIA, all others are performed by the operator.)

SCHEDULE MAINTENANCE CONTROL

1. Logon to the workstation
2. Review current Batch Boundary and current settings of absolute and relative boundaries.
3. Verify Batch Boundary is set to 14 - 21 days in the future.
4. Review Alert Period Parameters.
5. Set the Batch Request Receipt Alert Period to the 14 to 21 days from current day**.**

RECEIPT/VALIDATION OF SCHEDULES

6. *Shadow receipt of actual operations forecast schedules from the POCCs on Friday thru Monday.*
7. *Verify receipt and validation of schedule requests and transmission of SRMs.*

FORECAST SCHEDULE

8. Block resource NO USER times with S0200PMs based on OPM-54's (if applicable) for the Forecast period.
9. Verify all expected requests have been received and validated.
10. Activate the required Scheduling Priorities List.
11. Add a baseline customer SAR (for test day +14) to the schedule using SSC's.
12. Delete a SAR.
13. Verify the SAR has been deleted.

SCHEDULE GENERATION

15. Generate several alternate schedules based on several scheduling Priority lists.
16. Compare alternate forecast schedules and select the most effective forecast schedule.

RESOURCE AVAILABILITY

17. Generate a Resource availability report for the Forecast period.

Edits

18. Based on Resource Availability report perform conflict resolution to augment the selected forecast schedule.
19. Edit the originals of some declined requests.
20. Verify the edits.
21. Perform another schedule generation run.

SCHEDULE ACTIVATION

22. Execute initial Activation mode transmission?
23. Activate the forecast schedule.
24. *Verify distribution of SRMs for the declined requests and USMs for the scheduled events.*
25. Compare the SPSR generated forecast schedule to that of ops.
26. Verify that the schedule generated by SPSR is not worse than that of operations.

SCHEDULE TRANSMISSION

27. Transmit Confirmed Schedules (94's) to MOCC's

NCD

28. Perform a delog to analyze incoming SARs, and SDRs received during the test.

Roles and Responsibilities:

FA:

- Observe shadowing of receipt of schedule requests.
- Conduct generation of alternate forecast schedules.
- Evaluate/compare alternate schedules and select the most effective forecast schedule.
- Perform conflict resolution on selected schedule.
- Activate schedule.
- Compare SPSR's schedule with that of operations.
- Checkout redlined version of LOPs including, but not limited to:
    - NCC-LOP-002 OPM-59 Message Processing
    - NCC-LOP-006 OPM-54 WSC Scheduling Request Message Processing
    - SU-FA-LOP-001 Scheduling SHOS for the WSC MRT
    - SU-FA-LOP-002 Disabling the Forecast Position
    - SU-FA-LOP-003 Scheduling GRTS Events in the Forecast Period

NSIA:

- One NSIA engineer required.
- Configure system.
- Perform all italicized steps in test case.
- Observe shadowing of receipt of schedule requests.
- Observe/assist FA in completion of all schedule generation and activation activities.

DOCS:

- Checkout redlined version of the following documents:
    - 532-HB-NCC/SO Scheduling Handbook (Forecast Section).
    - 532-UG-NCC/SPS-1&2 SPS 1&2 User's Guide
      532-UG-NCC/SPS-3 SPS-3 (DT&T) User's Guide
      SPSR User's Guide

Estimated Run Time:

4 hours prep time (to include shadow time)*
4 hours run time (per variation)

*Note: Prep/shadow time will be done up front and will not need to be repeated for each run/variation. In other words, once the requests have been captured, a database dump can be done, and we can restore and run clean from that dump for each variation.

Written By: George Kellenbenz

Training/Ops Scenario Tracking Sheet

Enter the date of each run on the appropriate line:

	FA-1.0: Baseline	**FA-1.1: Database Activities**	**FA-1.2: New Enhancements**	**FA-1.3: Shuttle Operations**	**FA-1.4: Contingency Operations**
NSIA					
TRAINING:					
FA_1					
FA_2					
FA_3					
DOCUMENTATION:					
FA Scheduling Handbook					
SPSR User's Guide					
SU-FA-LOP-001					
SU-FA-LOP-002					
SU-FA-LOP-003					